Collaborative Exercise 2

July 31, 2017

Name:	Student ID:

Problem A:
Write answer to the following questions about a convolutional coding given in Fig. 1.

1. Draw Trellis diagram and calculate code (output) when message (input) is [0 1 0 0].
2. Draw state diagram of the convolutional coder.
3. Derive transfer function of the state diagram from state A to state E (E=A).
4. Calculate minimum distance between codes by using Taylor series expansion of the transfer function.
5. Compare about error correction capability with the original convolutional code with coding rate $r = \frac{1}{2}$, constraint length $N = 3$, and generator polynomial $g_1 = 7, g_2 = 5$.

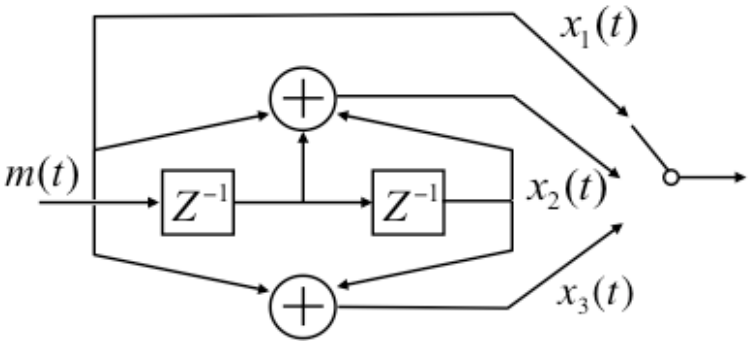

Figure 1: Convolutional coder with coding rate $r = \frac{1}{3}$, constraint length $N = 3$, and generator polynomial $g_1 = 4, g_2 = 7, g_3 = 5$.

Collaborative Exercise 2

July 31, 2017

Name:	Student ID:

Problem B:

Write answer to the following questions about OFDM communication system drawn in Fig 2.

1. Given channel coefficients $\mathbf{h} = [h_0, h_1, 0, 0]^{\mathrm{T}}$, calculate its cyclic shift matrix $\overleftrightarrow{\mathbf{H}}$ to calculate receive signal $\mathbf{y} = [y_0, y_1, y_2, y_3]^{\mathrm{T}}$ via convolution with transmit signal $\mathbf{s} = [s_0, s_1, s_2, s_3]^{\mathrm{T}}$.
2. Calculate 4×4 Fourier transformation matrix $\mathbf{F}$ and inverse Fourier transformation matrix $\mathbf{F}^{-1}$, and verify $\mathbf{F}^{-1}\mathbf{F} = \mathbf{I}$.
3. Calculate frequency response of the channel $\tilde{\mathbf{h}} = \mathbf{F}\mathbf{h}$ and draw their gain when $h_0 = 1$ and $h_1 = 1$.
4. Confirm $\mathbf{F}\overleftrightarrow{\mathbf{H}}\mathbf{F}^{-1} = \mathrm{diag}(\tilde{\mathbf{h}})$ when $\mathbf{h} = [h_0, h_1, 0, 0]^{\mathrm{T}}$.
5. Explain why Inter Symbol Interference is not occurred on frequency domain receive signal $\tilde{\mathbf{y}} = \mathbf{F}\mathbf{y}$, when frequency domain transmit signal is $\tilde{\mathbf{s}} = \mathbf{F}\mathbf{s}$.

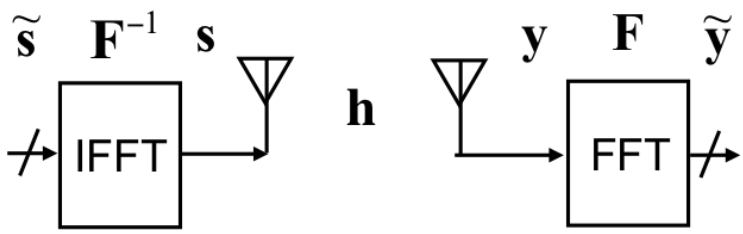

Figure 2: OFDM communication system.