2016 2Q

Wireless Communication Engineering

#5 Demodulation and Detection Error due to Noise

Kei Sakaguchi
sakaguchi@mobile.ee.

July 8, 2016

Course Schedule (1)

	Date	Text	Contents
#1	June 17	1, 7	Introduction to wireless communication systems
#2	June 17	2, 5, etc	Link budget design of wireless access
#3	June 24		Up/down conversion and equivalent baseband system
#4	June 24	3.3, 3.4	Digital modulation and pulse shaping
	July 1		No class
#5	July 8	3.5	Demodulation and detection error due to noise
#6	July 8	4.4	Channel fading and diversity combining

From Previous Lecture

- Digital modulation

$$s_{\mathrm{D}}(t) = s_{\mathrm{DI}}(t) + j s_{\mathrm{DQ}}(t) = f\big(m(t)\big)$$

- Amplitude
- Phase
- Frequency

Data rate, power efficiency, complexity, error rate

- Pulse shaping (band limitation)

$$s_{\mathrm{B}}(t) = \int g(\tau) s_{\mathrm{D}}(t-\tau)\,\mathrm{d}\tau$$

- Rectangular
- Nyquist
- Gaussian

Bandwidth, error rate

- IQ analog modulation

$$s(t) = s_{\mathrm{BI}}(t)\cos(2\pi f_{\mathrm{c}} t) - s_{\mathrm{BQ}}(t)\sin(2\pi f_{\mathrm{c}} t)$$

Carrier frequency

Contents

- Structure of receiver
- Analog demodulation
- Matched filter
- Coherent detection
- Error rate of BPSK signal
- Error rate of QAM signal
- Demonstration

Transmitter

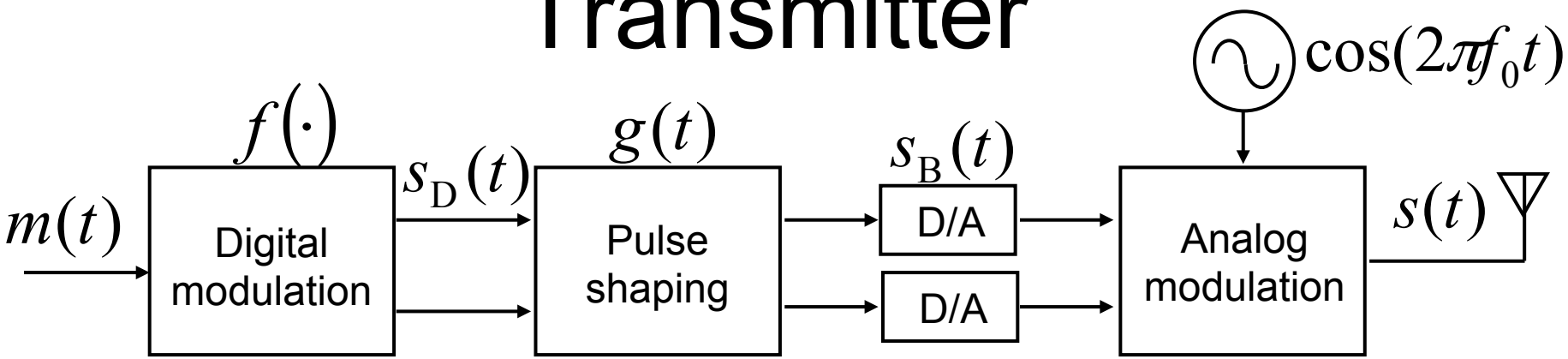

Carrier freq. f_0

Coverage $d_0 = \dfrac{c}{4\pi f_0^{3/2}} \sqrt{\dfrac{P_{\mathrm{t}}}{\alpha N_0 \gamma_0}}$

Symbol length T_{s}

Bandwidth $B \propto 1/T_{\mathrm{s}}$

Modulation order M

Data rate $\dfrac{\log_2 M}{T_{\mathrm{s}}}$

Modulation $f(\cdot)$

Energy efficiency,
Complexity of circuit,
Bit error rate p_{e}

Pulse $g(t)$

Power leackage

$$S_{\mathrm{B}}^{s}(t) = |g(f)|^2 S_{\mathrm{D}}^{s}(f)$$

Receiver

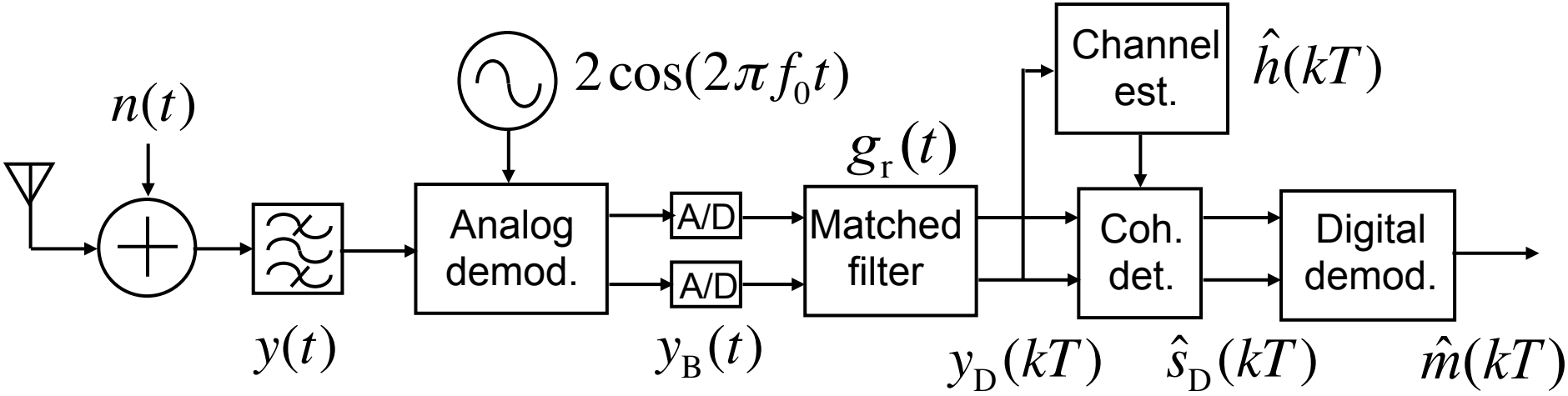

Additive white noise

Thermal noise generated in receiver

Bandpass fileter

Inter system interference cancellation

Analog demodulation

Convert signal from RF to BB

Matched filter

Maximization of SNR

Coherent detection

Compensation of channel response

Digital demodulation

Convert complex signal to message

RF & BB

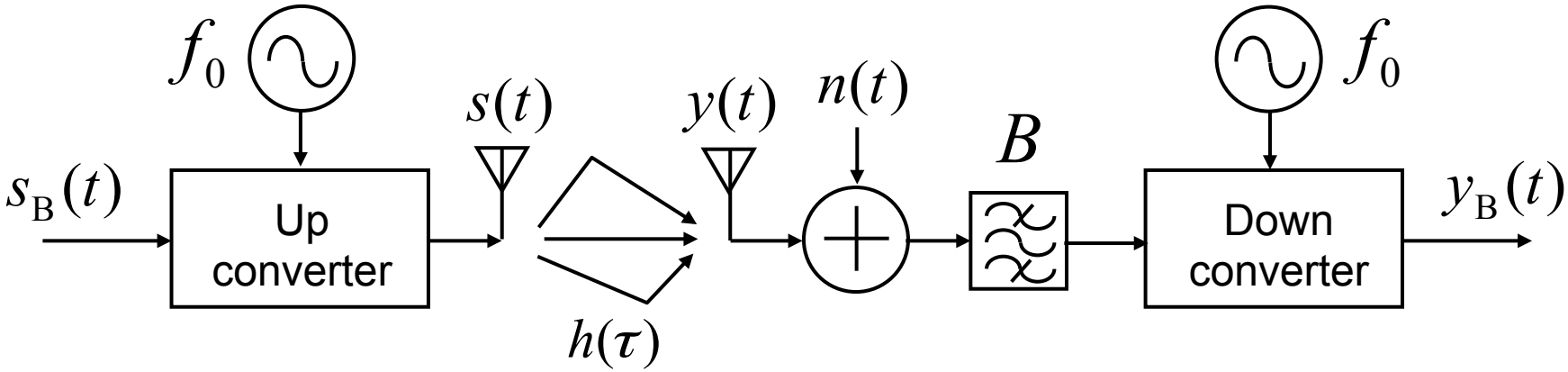

Transmitter

$$s(t) = \mathrm{Re}\left[s_R(t)\right]$$

$$s_R(t) = s_B(t)e^{j2\pi f_0 t}$$

$$s_B(t)$$

Receiver

$$y(t) = \int h(\tau)s(t-\tau)\mathrm{d}\tau$$

$$y_R(t) = y(t) + j\,\mathrm{hilb}\big(y(t)\big)$$

$$y_B(t) = y_R(t)e^{-j2\pi f_0 t}$$

Analog Demodulation

BB receive signal

$$y_{\mathrm{B}}(t) = y_{\mathrm{BI}}(t) + jy_{\mathrm{BQ}}(t)$$

$$y_{\mathrm{R}}(t) = y_{\mathrm{B}}(t)e^{j2\pi f_0 t}$$

$$y(t) = \mathrm{Re}\left[y_{\mathrm{R}}(t)\right]$$

$$= y_{\mathrm{BI}}(t)\cos 2\pi f_0 t - y_{\mathrm{BQ}}(t)\sin 2\pi f_0 t$$

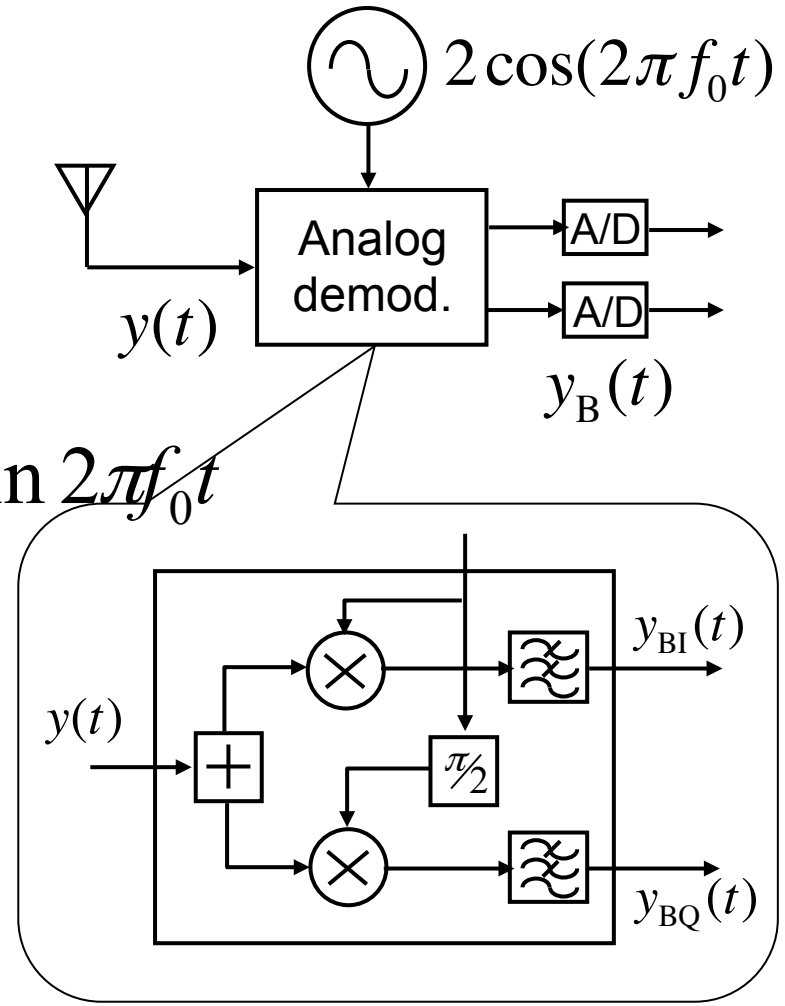

Analog demodulation

Low pass filter

$$y_{\mathrm{BI}}(t) = 2\int y(t)\cos 2\pi f_0 t \,\mathrm{d}t$$

$$y_{\mathrm{BQ}}(t) = -2\int y(t)\sin 2\pi f_0 t \,\mathrm{d}t$$

Narrow Band System

Equivalent BB system

$$y_{\mathrm{B}}(t) = \int h_{\mathrm{B}}(\tau)\tilde{s}_{\mathrm{B}}(t-\tau)\,\mathrm{d}\tau$$

$$h_{\mathrm{B}}(\tau) = h(\tau)e^{-j2\pi f_0\tau}$$

Narrow band assumption

$$y_{\mathrm{B}}(t) = h_{\mathrm{B}}(\tau_0)\tilde{s}_{\mathrm{B}}(t-\tau_0) = h_{\mathrm{B}}s_{\mathrm{B}}(t) = \left|h_{\mathrm{B}}\right|e^{j\theta_0}s_{\mathrm{B}}(t)$$

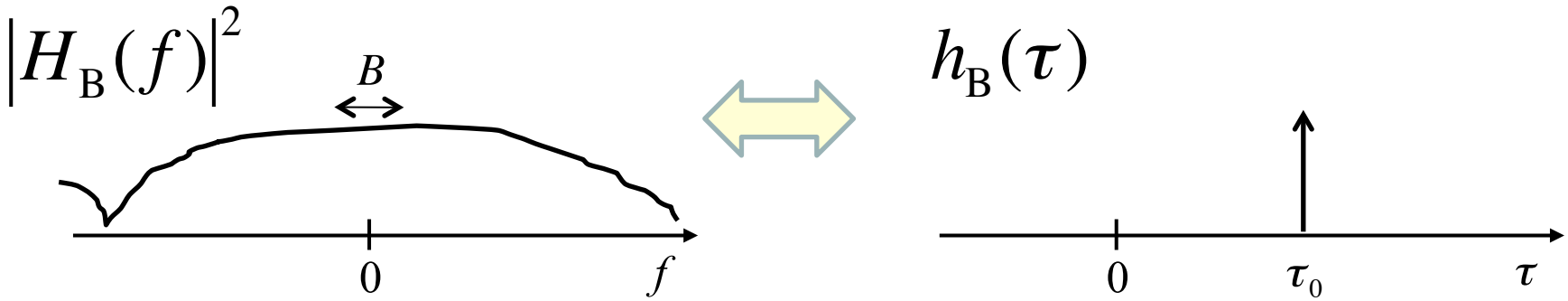

Noise

BB noise

$$n_{\mathrm{B}}(t) = n_{\mathrm{BI}}(t) + jn_{\mathrm{BQ}}(t)$$

$$n_{\mathrm{R}}(t) = n_{\mathrm{B}}(t)e^{j2\pi f_0 t}$$

$$n(t) = \mathrm{Re}\left[n_{\mathrm{R}}(t)\right]$$

$$= n_{\mathrm{BI}}(t)\cos 2\pi f_0 t - n_{\mathrm{BQ}}(t)\sin 2\pi f_0 t$$

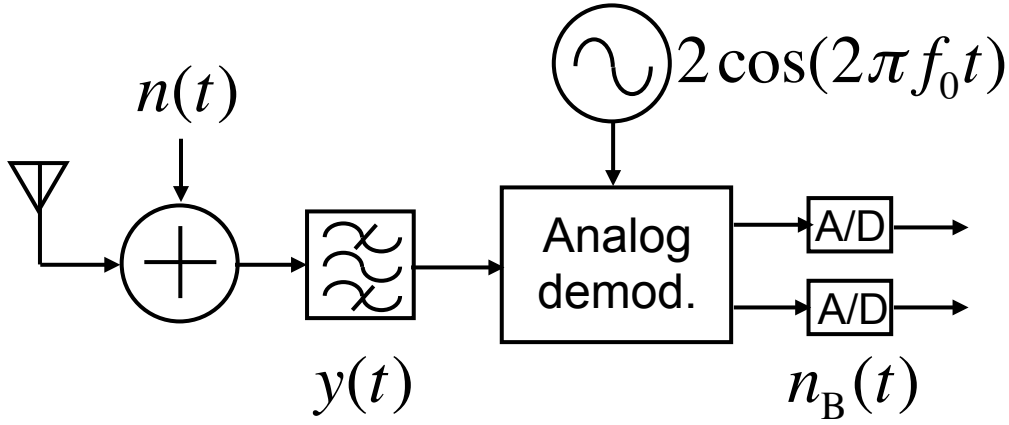

Analog demodulation

$$n_{\mathrm{BI}}(t) = 2\int n(t)\cos 2\pi f_0 t \,\mathrm{d}t$$

$$n_{\mathrm{BQ}}(t) = -2\int n(t)\sin 2\pi f_0 t \,\mathrm{d}t$$

Property of Noise

Noise power

$$P_{\mathrm{n}} = P_{\mathrm{nI}} + P_{\mathrm{nQ}} = N_0 B = \sigma^2$$

PDF of noise

$$p(n_{\mathrm{I}}) = p(n_{\mathrm{Q}}) = \frac{1}{\sqrt{\pi\sigma^2}} e^{-\frac{n_x^2}{\sigma^2}}$$

$$\mathrm{E}[n_{\mathrm{I}}] = \mathrm{E}[n_{\mathrm{Q}}] = 0$$

$$\mathrm{E}\left[|n_{\mathrm{I}}|^2\right] = \mathrm{E}\left[|n_{\mathrm{Q}}|^2\right] = \frac{\sigma^2}{2}$$

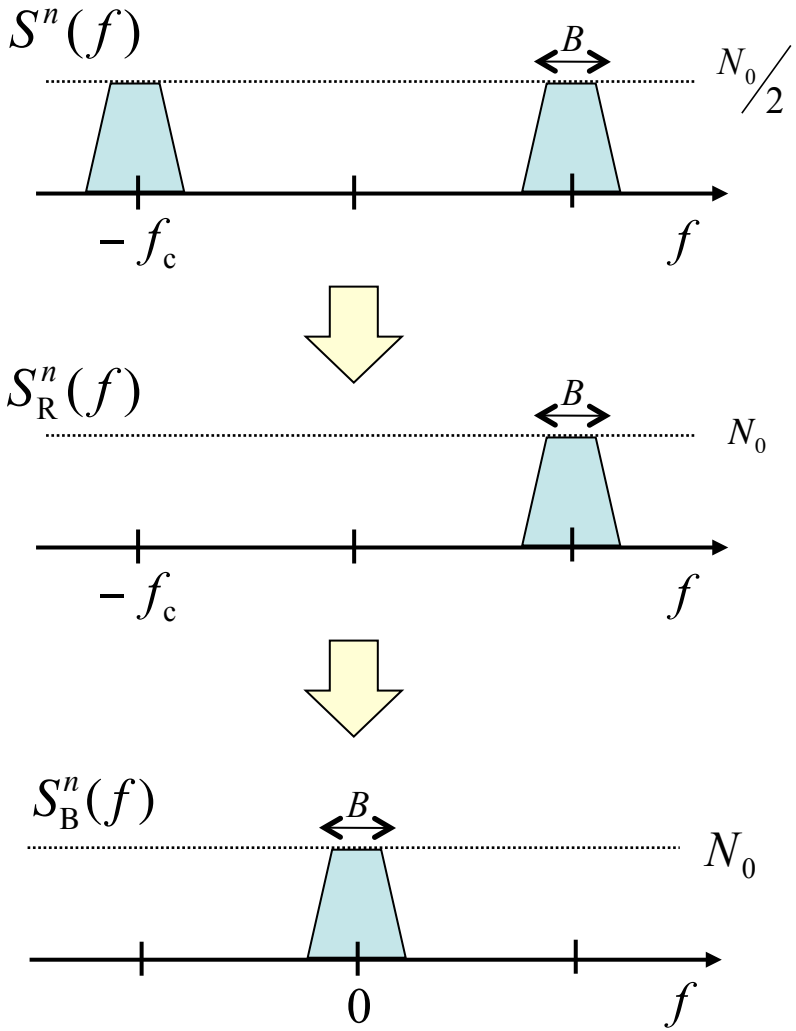

Matched Filter (1)

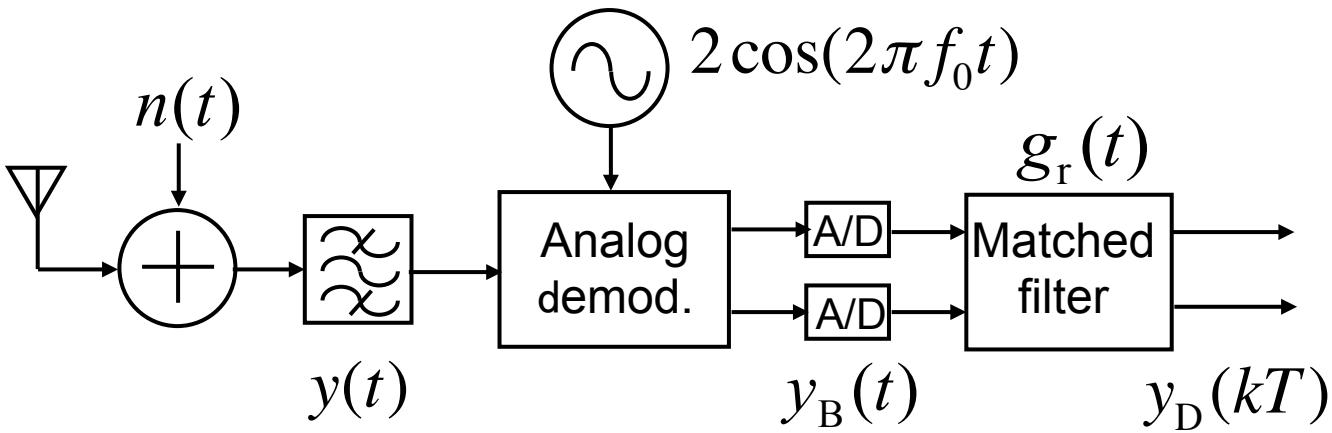

BB received signal

$$y_B(t) = h_B s_B(t) + n_B(t)$$

BB transmit signal

$$s_B(t) = g_s(t) \otimes s_D(t) = \sum_n a_n g_s(t - nT)$$

Output of receiver filter

$$y_D(t) = g_r(t) \otimes y_B(t) = g_r(t) \otimes g_s(t) \otimes s_D(t) + g_r(t) \otimes n_B(t)$$

Matched Filter (2)

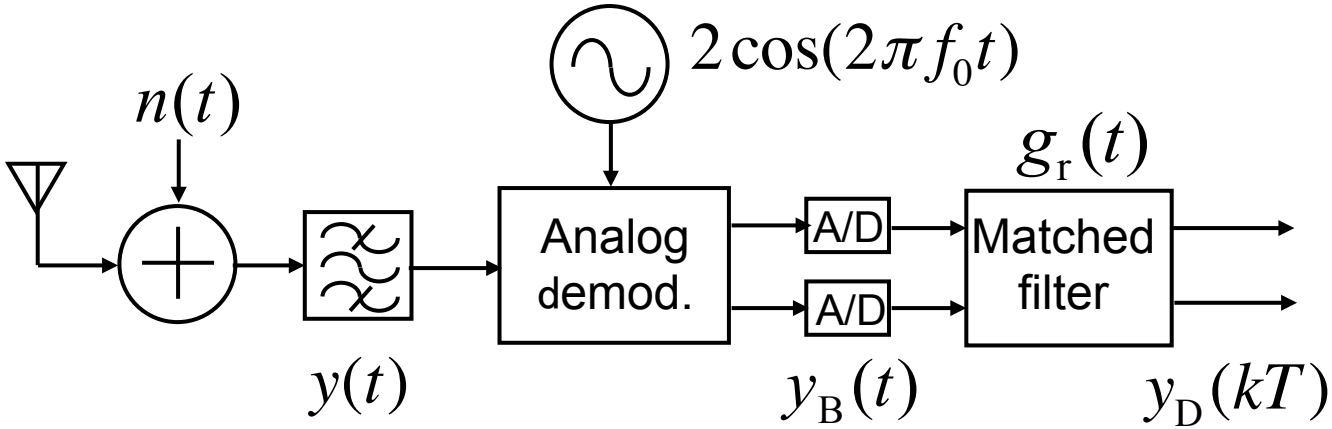

Receive filter output SNR

$$\gamma = \frac{|g(0)|^2}{\mathrm{E}[|n_D(t)|^2]}$$

$$g(t) = g_r(t) \otimes g_s(t) \qquad n_D(t) = g_r(t) \otimes n_B(t)$$

Combined pulse of transmitter & receiver

Frequency domain analysis

Signal power

$$|g(0)|^2 = \left| \int G_r(f) G_s(f) \mathrm{d}f \right|^2$$

Noise power

$$\mathrm{E}[|n_D(t)|^2] = N_0 \int |G_r(f)|^2 \, \mathrm{d}f$$

Matched Filter (3)

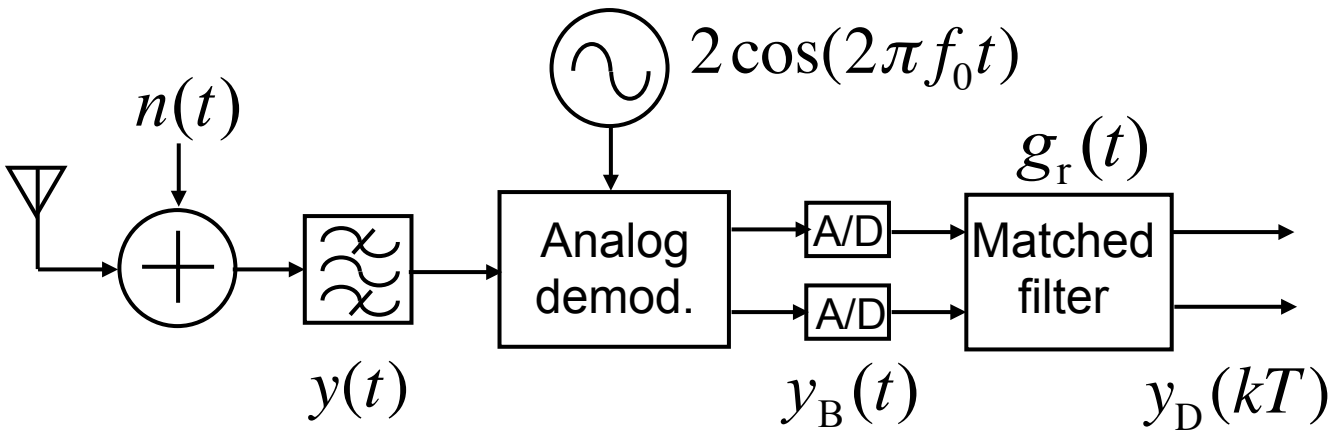

Schwarz inequality

$$|g(0)|^2 = \left|\int G_r(f)G_s(f)\mathrm{d}f\right|^2 \le \int |G_r(f)|^2 \mathrm{d}f \int |G_s(f)|^2 \mathrm{d}f$$

Matched filter (SNR maximization)

$$G_r(f) = \left(G_s(f)\right)^* \qquad g_r(t) = g_s(-t)$$

Maximum SNR

Energy of transmit pulse

$$\gamma = \frac{|g(0)|^2}{\mathrm{E}[|n(t)|^2]} \le \frac{1}{N_0}\int |G_s(f)|^2 \,\mathrm{d}f = \frac{E_s}{N_0} = \frac{P_s T_s}{N_0} = \frac{P_s}{N_0 B} = \frac{P_s}{\sigma^2}$$

Detection Schemes

Received signal

$$y_{\mathrm{D}}(k) = h_{\mathrm{B}} s_{\mathrm{D}}(k) + n_{\mathrm{D}}(k)$$

Detection	Modulation	Demodulation
Envelope	ASK	$\hat{s}_{\mathrm{D}}(k) = \left\lvert y_{\mathrm{D}}(k) \right\rvert / \left\lvert h_{\mathrm{B}} \right\rvert$
Correlation	FSK	$\left\lvert \int y_{\mathrm{B}}(t) \exp(j\pi\Delta f t)\mathrm{d}t \right\rvert \gtrless \left\lvert \int y_{\mathrm{B}}(t) \exp(-j\pi\Delta f t)\mathrm{d}t \right\rvert$
Differential	Differential mod. $\tilde{\theta}(k) = \theta(k) + \theta(k-1)$	$\hat{s}_{\mathrm{D}}(k) = y_{\mathrm{D}}(k) / y_{\mathrm{D}}(k-1)$
Coherent	PSK, QAM, MSK	$\hat{s}_{\mathrm{D}}(t) = y_{\mathrm{D}}(t) / h_{\mathrm{B}}$

Coherent Detection

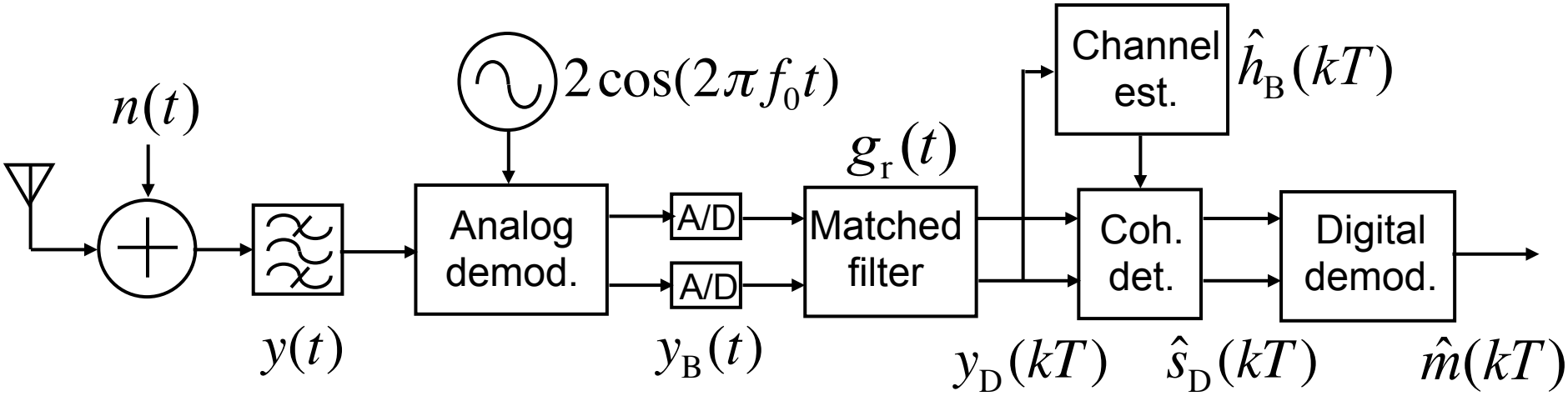

Output of matched filter

$$y_D(t) = g(t) \otimes h_B s_D(t) + g_r(t) \otimes n_B(t)$$

$$y_D(k) = h_B s_D(k) + n_D(k)$$

$$\Rightarrow \quad y(k) = h_B s(k) + n(k)$$

Coherent detection

$$\hat{s}(k) = y(k) / \hat{h}_B$$

Compensation of channel response

Nyquist matched filter

$$g(t) = g_r(t) \otimes g_s(t)$$

$$g(0) = \int G(f) \mathrm{d}f = 1$$

$$\int |G_r(f)|^2 \mathrm{d}f = 1$$

Digital demodulation

$$\hat{m}(k) = f^{-1}(\hat{s}(k))$$

for each modulation method of ASK, PSK, FSK

Channel Estimation

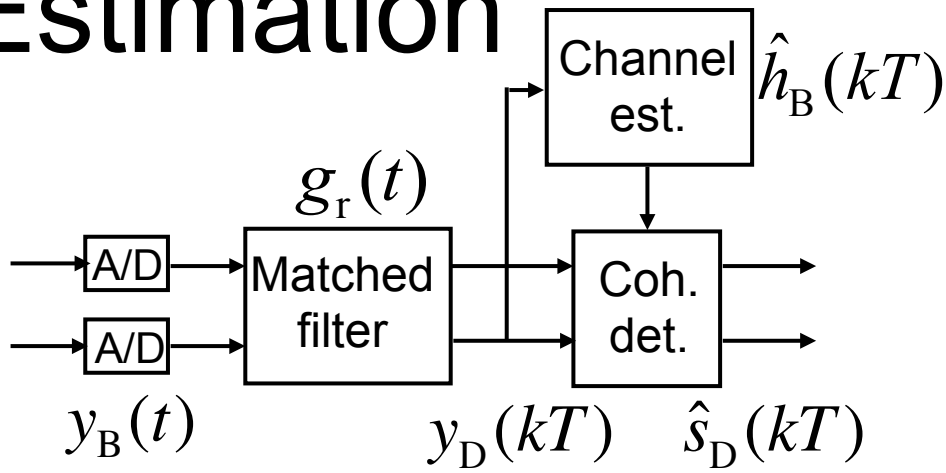

Output of matched filter

$$y(k) = h_{\mathrm{B}} s_{\mathrm{TR}}(k) + n(k)$$

Training signal

Channel estimation

$$\tilde{h}_{\mathrm{B}} = y(k) / s_{\mathrm{TR}}(k)$$

$$\hat{h}_{\mathrm{B}} = \frac{1}{K} \sum_{k=1}^{K} \tilde{h}_{\mathrm{B}}(k)$$

Frame structure of transmit signal

# of training symbols: K

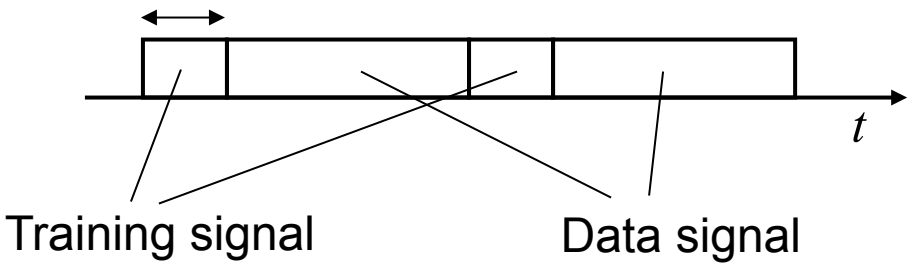

Error Rate of BPSK Signal

Output of coherent detection

$$\hat{s}(k) = y(k)/h_{\mathrm{B}}$$
$$= s(k) + n(k)/h_{\mathrm{B}}$$

Complex Gaussian with variance $\sigma^2/|h_{\mathrm{B}}|^2$

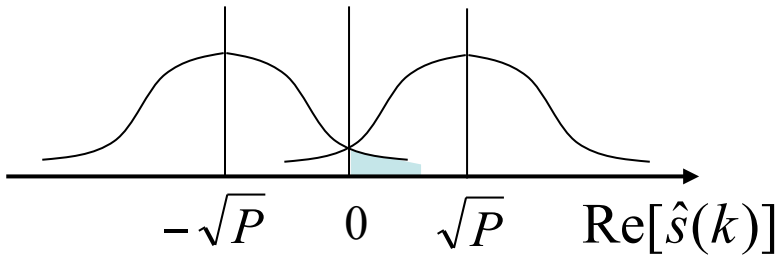

Transmit power

$$E[|s(k)|^2] = P$$

Complementary error function

$$\mathrm{erfc}(x) = \frac{2}{\sqrt{\pi}}\int_x^{\infty} \exp\left(-z^2\right)\mathrm{d}z$$

Error rate of BPSK signal

$$P_{\mathrm{eb}} = \frac{1}{\sqrt{\pi\sigma^2/|h_{\mathrm{B}}|^2}}\int_0^{\infty} \exp\left(-\frac{(x+\sqrt{P})}{\sigma^2/|h_{\mathrm{B}}|^2}\right)\mathrm{d}x$$

$$= \frac{1}{2}\mathrm{erfc}\left(\sqrt{\frac{P|h_{\mathrm{B}}|^2}{\sigma^2}}\right) = \frac{1}{2}\mathrm{erfc}\left(\sqrt{\gamma}\right)$$

Receive SNR

$$\gamma = \frac{P|h_{\mathrm{B}}|^2}{\sigma^2}$$

Error Rate of QPSK Signal

Output of coherent detection

$$\hat{s}(k) = y(k)/h_{\mathrm{B}}$$

$$= s_{\mathrm{I}}(k) + js_{\mathrm{Q}}(k) + n(k)/h_{\mathrm{B}}$$

QPSK

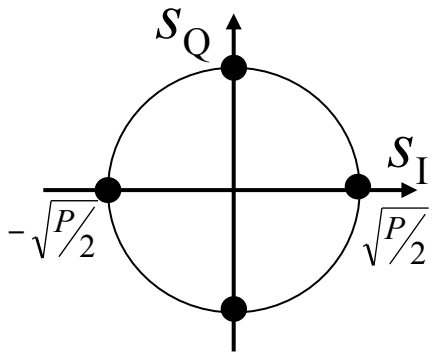

Transmit power

$$E[|s_{\mathrm{I}}(k)|^2] = E[|s_{\mathrm{Q}}(k)|^2] = P/2$$

Bit error rate

$$P_{\mathrm{eb}} = \frac{1}{2}\mathrm{erfc}\left(\sqrt{\frac{P|h_{\mathrm{B}}|^2}{2\sigma^2}}\right) = \frac{1}{2}\mathrm{erfc}\left(\sqrt{\frac{\gamma}{2}}\right)$$

Proportional to SNR per bit

Symbol error rate

$$P_{\mathrm{es}} = 1 - \underbrace{(1 - P_{\mathrm{eb}})}_{\mathrm{I}}\underbrace{(1 - P_{\mathrm{eb}})}_{\mathrm{Q}} = 2P_{\mathrm{eb}} - P_{\mathrm{eb}}^2 \cong 2P_{\mathrm{eb}}$$

Error Rate of QAM Signal

Symbol error rate

$$P_{\mathrm{es}} = 1-\left(1-P_{\mathrm{esI}}\right)\left(1-P_{\mathrm{esQ}}\right) \cong 2P_{\mathrm{esI}} = 2P_{\mathrm{esQ}}$$

$$P_{\mathrm{esI}} = \underbrace{\left(\frac{\sqrt{M}-2}{\sqrt{M}}\right)\times 2P_{\mathrm{eb}}^{\mathrm{BPSK}}}_{\text{Center}} + \underbrace{\left(\frac{2}{\sqrt{M}}\right)\times P_{\mathrm{eb}}^{\mathrm{BPSK}}}_{\text{Two edges}}$$

$$= \left(1-\frac{1}{\sqrt{M}}\right)\mathrm{erfc}\left(\sqrt{\frac{E_0\left|h_{\mathrm{B}}\right|^2}{\sigma^2}}\right)$$

16QAM

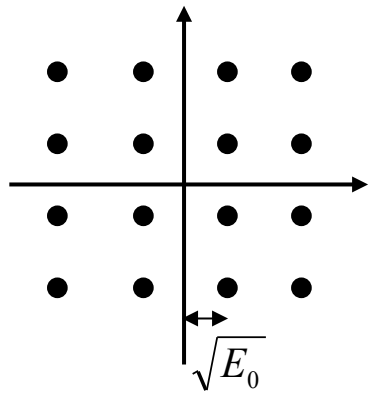

Transmit power

$$P = 2\left(\frac{2E_0}{\sqrt{M}}\sum_{i=1}^{\sqrt{M}/2}(2i-1)^2\right) = \frac{2(M-1)E_0}{3}$$

Bit error rate

$$P_{\mathrm{eb}} \cong \frac{1}{\log_2 M}P_{\mathrm{es}}$$

Symbol error corresponds to one bit error owing to Gray coding

Error Rate Performance

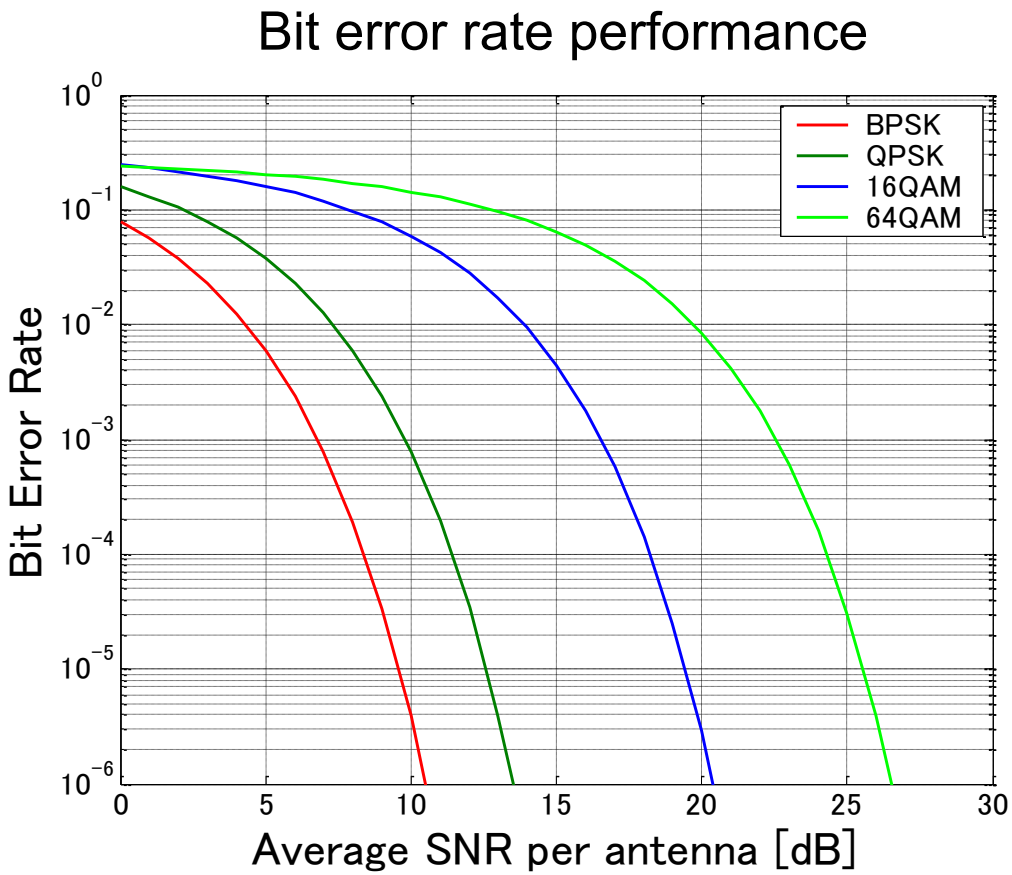

Summary

- Analog demodulation & matched fileter

$$y(t) = \mathrm{Re}[hs_{\mathrm{B}}(t)\exp(j2\pi f_0 t)] \longrightarrow y_{\mathrm{B}}(t) = h_{\mathrm{B}}s_{\mathrm{B}}(t) + n_{\mathrm{B}}(t)$$

$$y_{\mathrm{D}}(t) = g(t) \otimes h_{\mathrm{B}}s_{\mathrm{D}}(t) + g_{\mathrm{r}}(t) \otimes n_{\mathrm{B}}(t)$$

- Channel estimation & coherent detection

$$\hat{h}_{\mathrm{B}} = \frac{1}{K}\sum_{k=1}^{K} y(k) \big/ s_{\mathrm{TR}}(k) \longrightarrow \hat{s}(k) = y(k)/h_{\mathrm{B}} = s(k) + n(k)/h_{\mathrm{B}}$$

- Error rate of BPSK signal

$$P_{\mathrm{eb}} = \frac{1}{2}\mathrm{erfc}\left(\sqrt{\frac{P|h_{\mathrm{B}}|^2}{\sigma^2}}\right) = \frac{1}{2}\mathrm{erfc}\left(\sqrt{\gamma}\right)$$

Nyquist matched fileter

$$g(t) = g_{\mathrm{r}}(t) \otimes g_{\mathrm{s}}(t) = g_{\mathrm{s}}(-t) \otimes g_{\mathrm{s}}(t)$$

$$g(0) = \int G(f)\mathrm{d}f = 1 \quad \int |G_{\mathrm{r}}(f)|^2 \mathrm{d}f = 1$$

- Error rate of QAM signal

$$P_{\mathrm{eb}} \cong \frac{2}{\log_2 M}\left(1 - \frac{1}{\sqrt{M}}\right)\mathrm{erfc}\left(\sqrt{\frac{E_0|h_{\mathrm{B}}|^2}{\sigma^2}}\right)$$

Demo

Transmitter

Training signal

Coherent detect.

Digital demod.

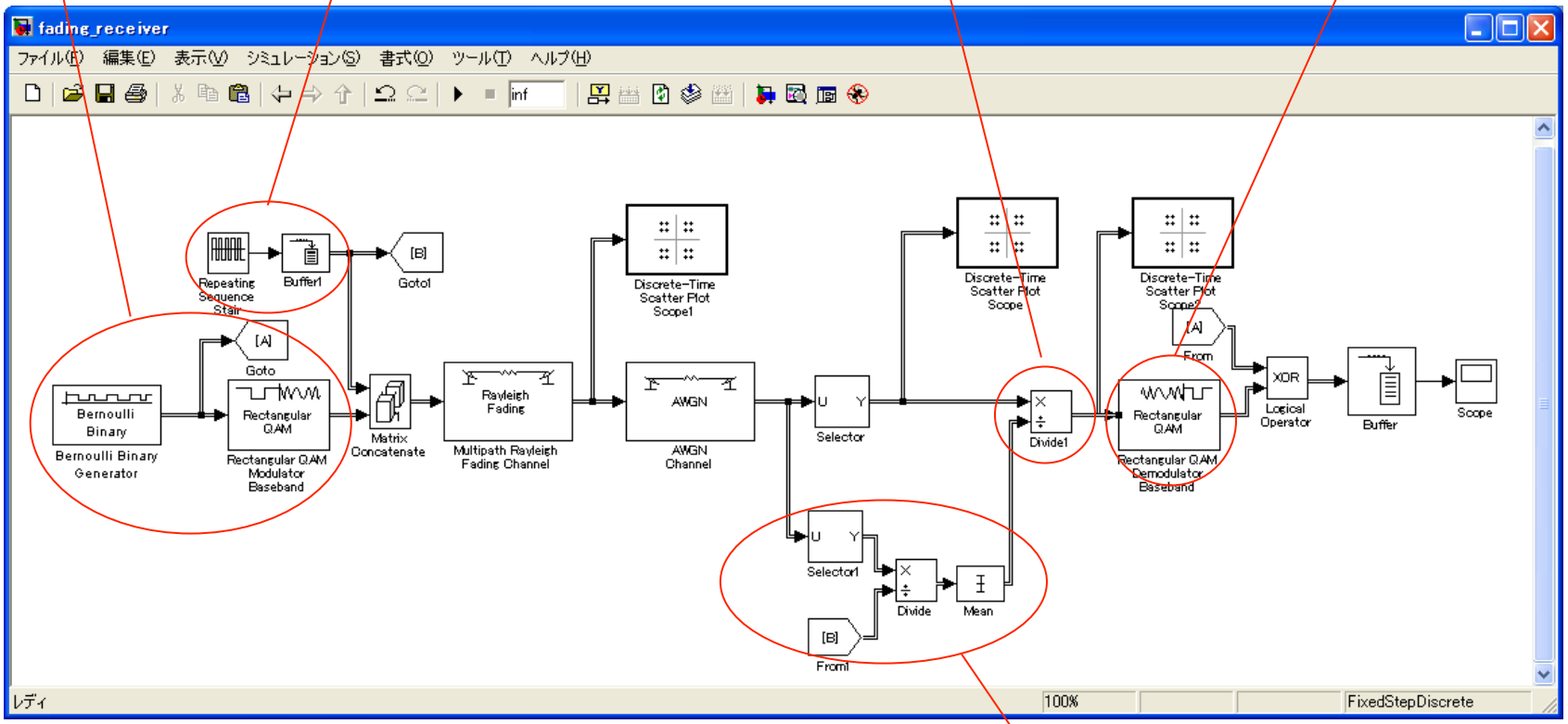

Channel estimation

Error Rate of MSK

Output of coherent detection

$$\hat{s}(k) = s(k) + {n(k)}/{h_{\mathrm{B}}}$$

MSK modulation

$$s(k) = \exp(j\theta(k))$$

$$\theta(k) = {\pi a_k}/{2} + \theta(k-1)$$

BER of MSK signal

$$P_{\mathrm{eb}} = \frac{1}{2}\mathrm{erfc}\left(\sqrt{\frac{P|h_{\mathrm{B}}|^2}{\sigma^2}}\right) = \frac{1}{2}\mathrm{erfc}\left(\sqrt{\gamma}\right)$$
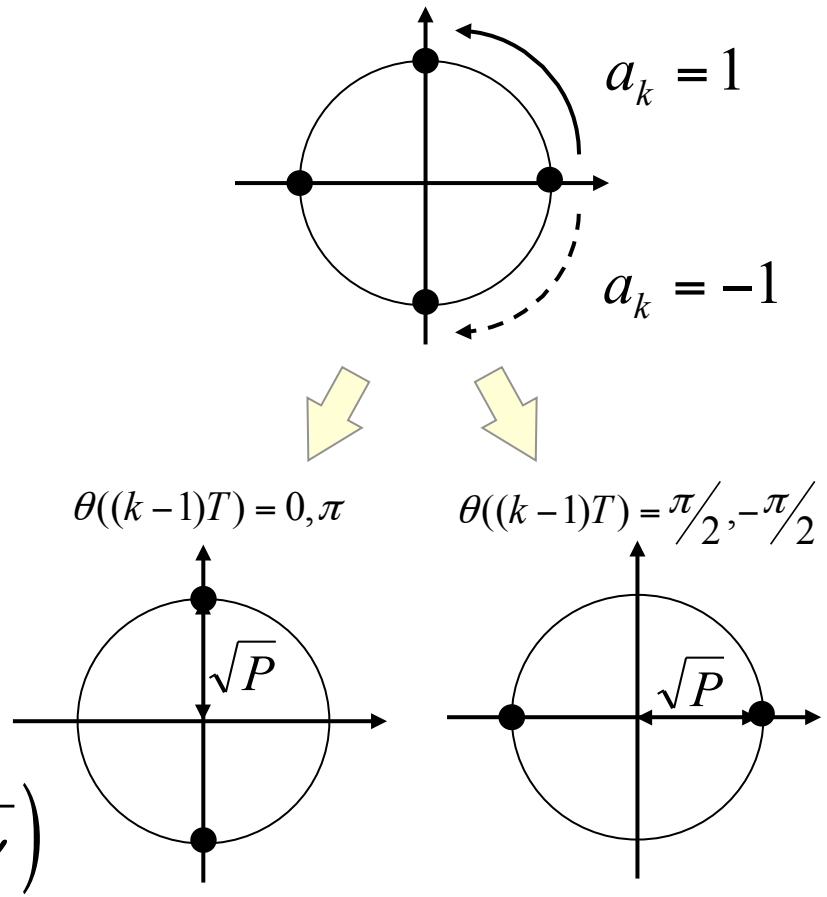
Constellation