Synthesis of Analog Integrated Circuits

Circuit Elements

2-terminal circuit element

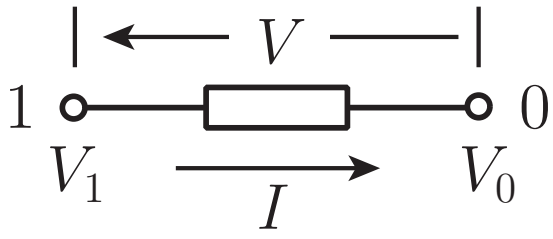

I : current [A]

V_0, V_1: potential [V]

$V = V_1 - V_0$: voltage [V]

$P = V \times I$: power [W]

Passive Element

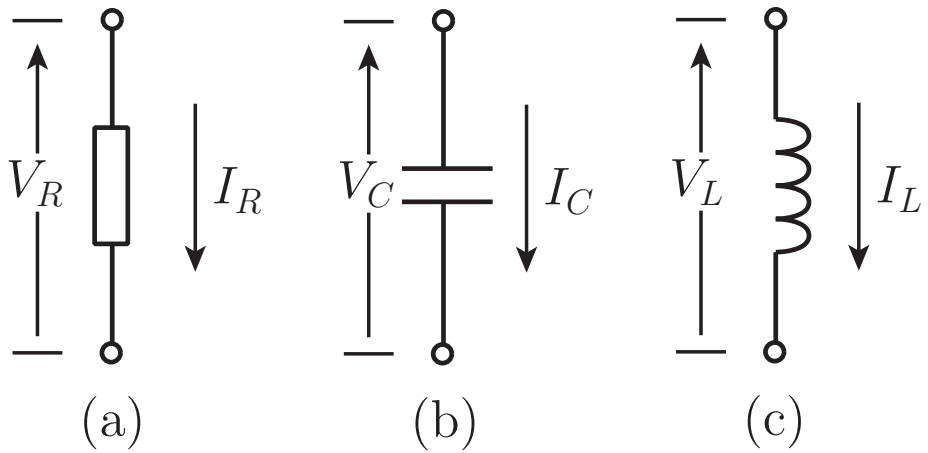

$$(a)\ \text{resistor}:\ V_R = RI_R, \qquad I_R = GV_R$$

R : resistance [Ω], G : conductance [S]

$$(b)\ \text{capacitor}:\ I_C = C\frac{dV_C}{dt}$$

C : capacitance [F]

$$(c)\ \text{inductor}:\ V_L = L\frac{dI_L}{dt}$$

L : inductance [H]

Independent Source（Voltage Source）

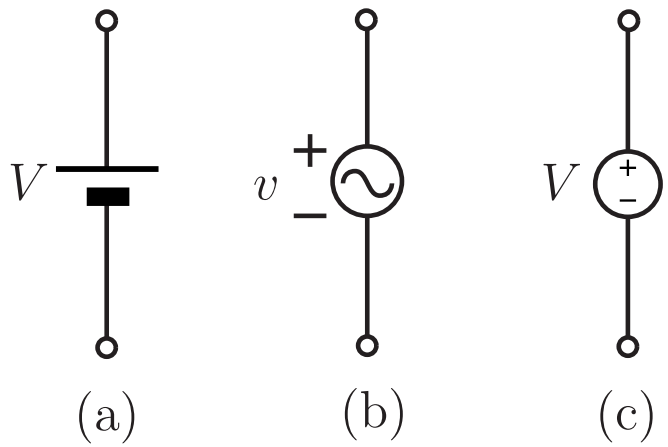

(a) DC voltage source

(b) sinousoidal AC voltage source (small signal)

(c) voltage source

Question : What is an equivalent circuit for a zero-value voltage source?

Independent Source (Current Source)

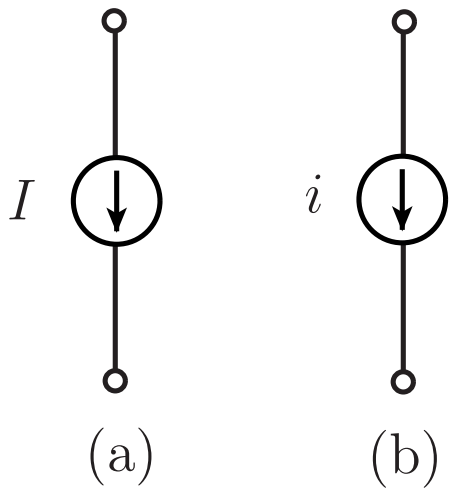

(a) DC current source

(b) sinousoidal AC current source

Question : What is an equivalent circuit for a zero-value current source?

Controlled Sources

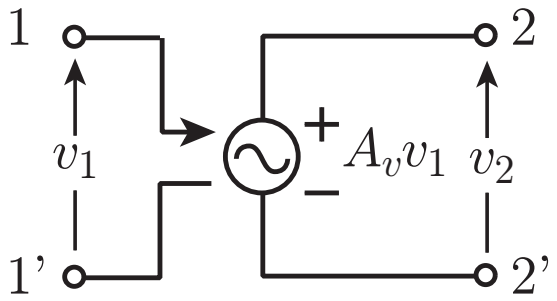

(a) Voltage-Controlled Voltage Soucce

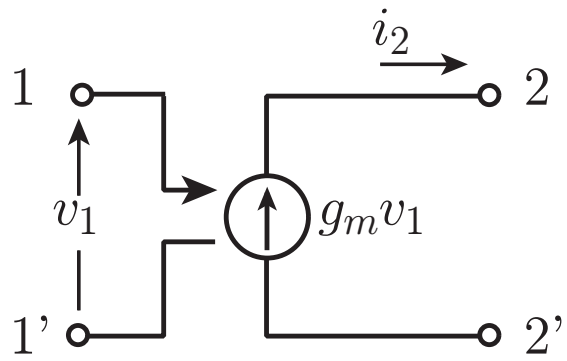

(b) Voltage-Controlled Current Soucce

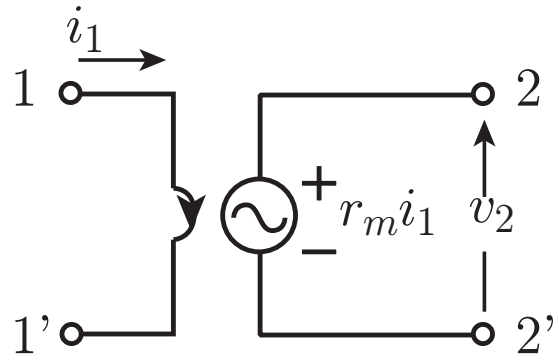

(c) Current-Controlled Voltage Soucce

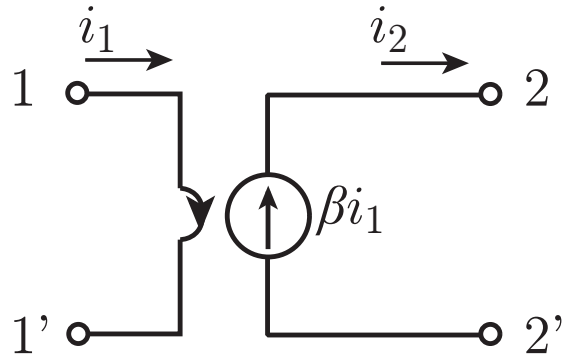

(d) Current-Controlled Current Soucce

A_v: votage gain, g_m: transconductance [S]

r_m: transresistance [Ω], β : current gain

MOS Transistor

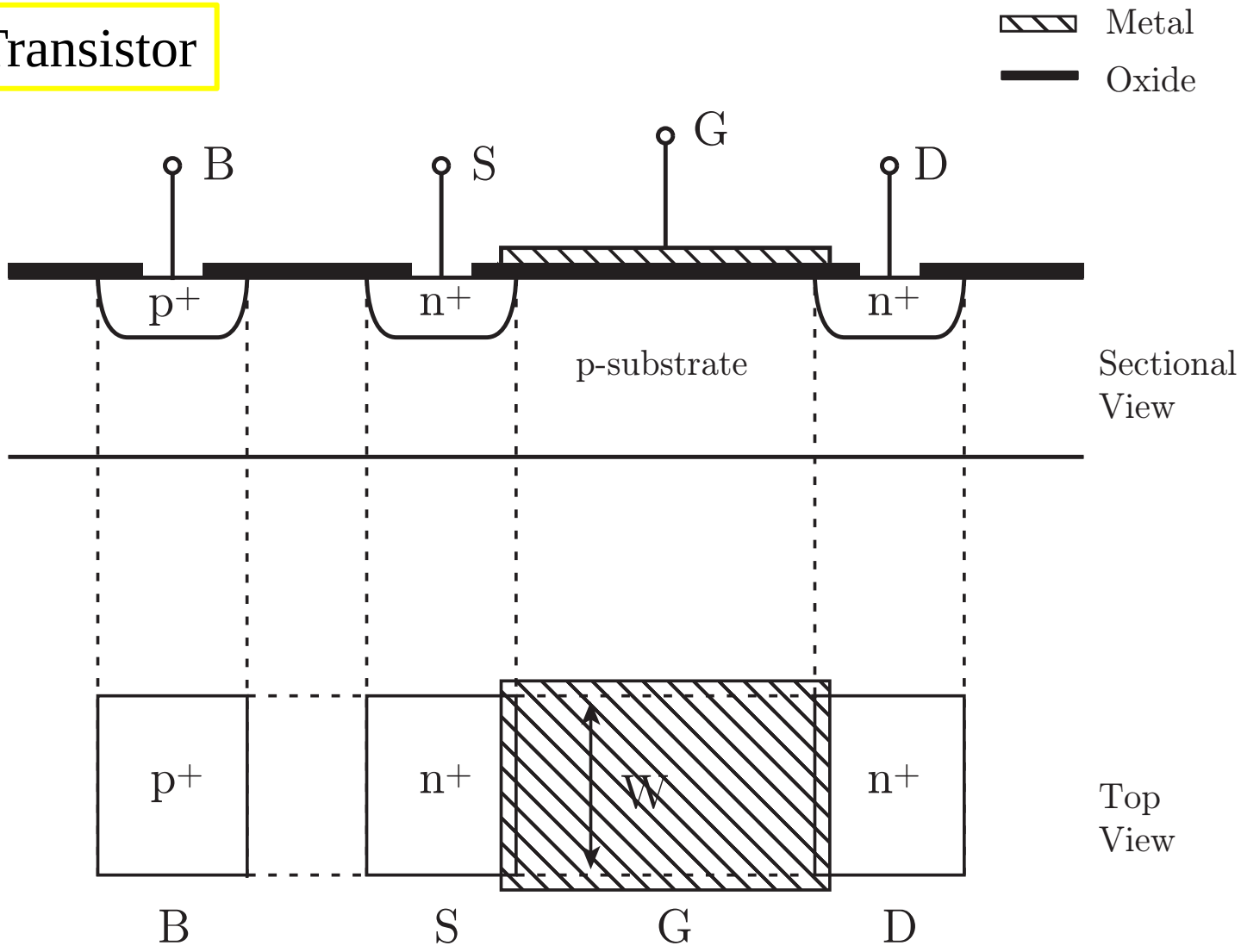

B:	Bulk	S:	Source
G:	Gate	D:	Drain

Symbols of MOS transistors

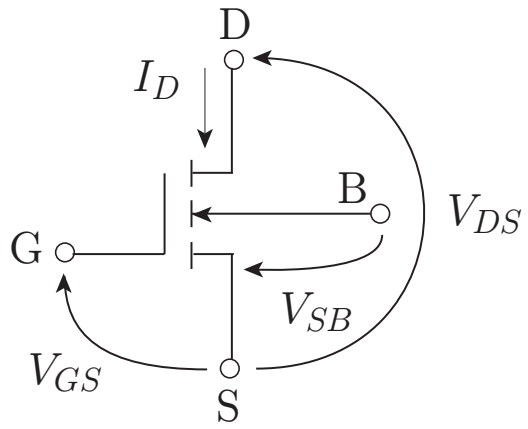

Enhancement type

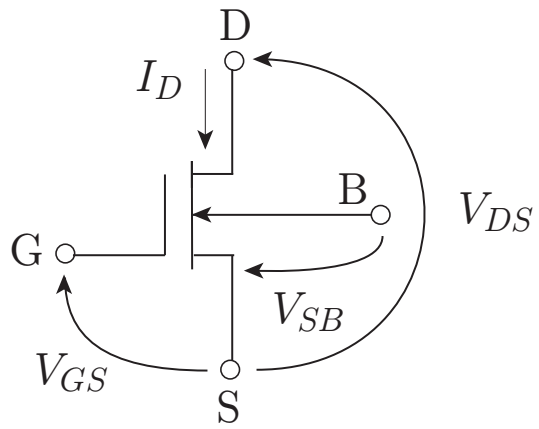

Depletion type

n-channel MOS transistors

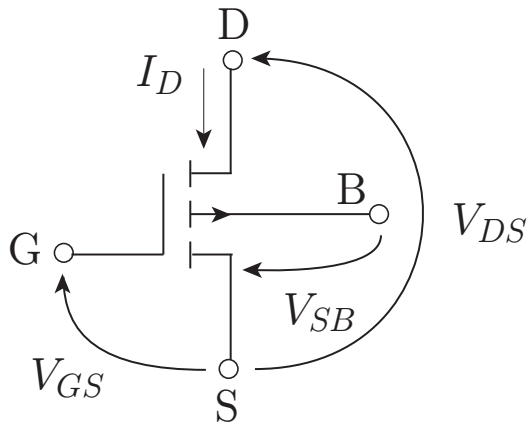

Enhancement type

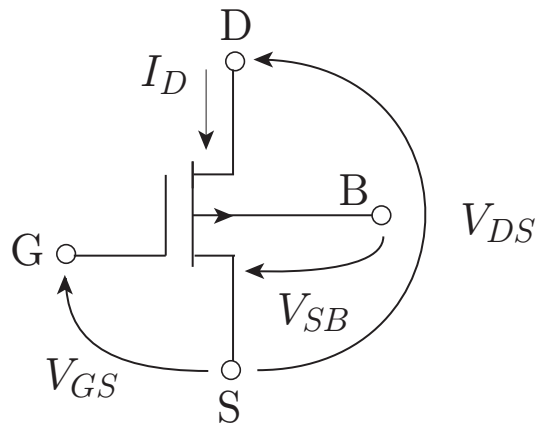

Depletion type

p-channel MOS transistors

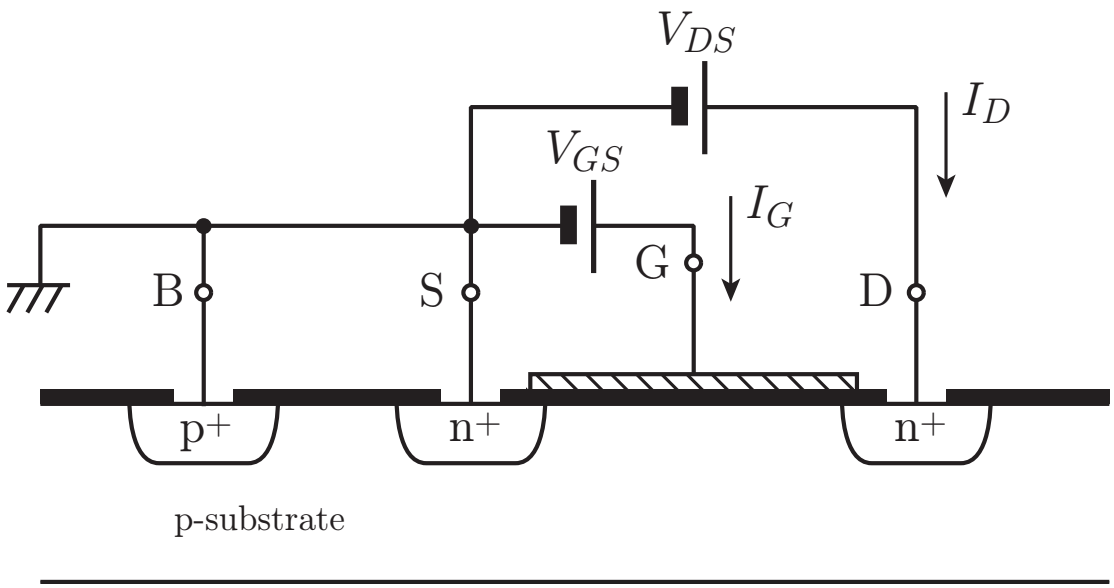

Assume that V_{SB}=0 for simplicity.

$$\boxed{I_G=0}$$

Cutoff region : $V_T \geq V_{GS}$

Nonsaturation region : $V_{GS}-V_T > V_{DS} \geq 0$

Saturation region : $V_{DS} \geq V_{GS}-V_T > 0$

Model of MOS Transistors

No model for Large Signals

Cutoff region : $V_T \geq V_{GS}$

Nonsaturation region : $V_{GS} - V_T > V_{DS} \geq 0$

Saturation region : $V_{DS} \geq V_{GS} - V_T > 0$

Cutoff region : $I_D = 0$

Nonsaturation region : $I_D = 2K(V_{GS} - V_T - \frac{V_{DS}}{2})V_{DS}$

Saturation region : $I_D = K(V_{GS} - V_T)^2$

$K = \frac{1}{2}\mu C_{OX}\frac{W}{L}$: Tranconductance parameter [S/V]

Circuit Theorems

Kirchhoff's Law (Current Law)

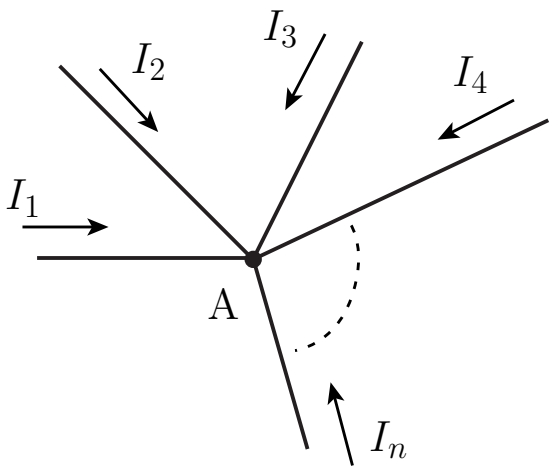

$$I_1 + I_2 + \cdots + I_n = 0$$

The sum of currents flowing into a node is zero.

Kirchhoff's Law (Voltage Law)

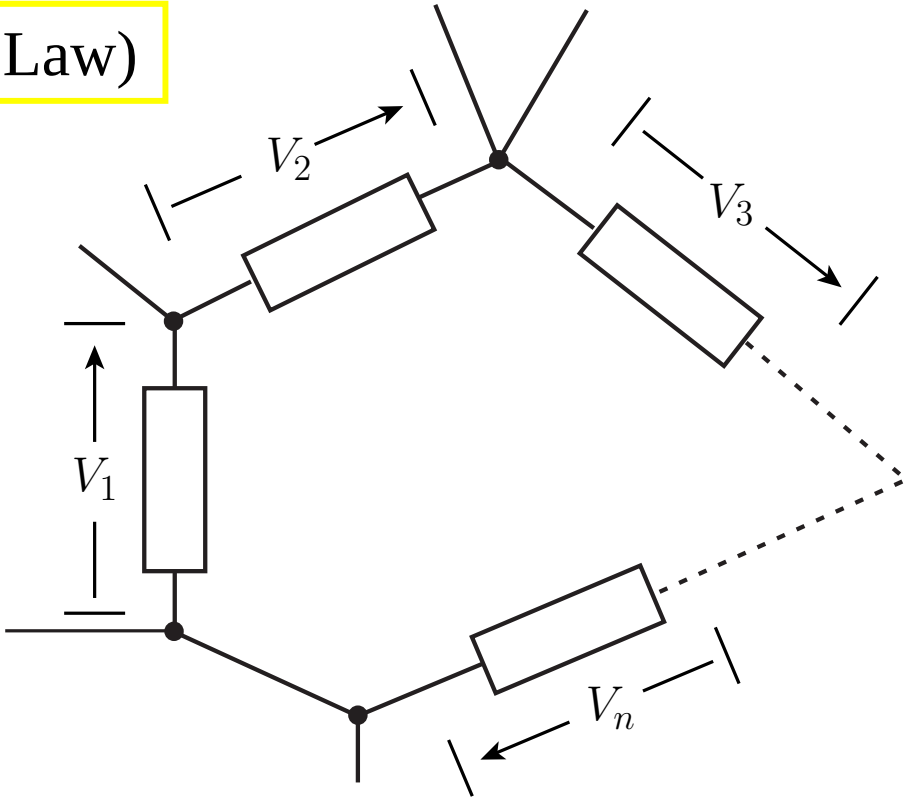

$$V_1 + V_2 + \cdots + V_n = 0$$

The sum of voltages across elements on a loop is zero.

Equivalent transformation for voltage and current sources

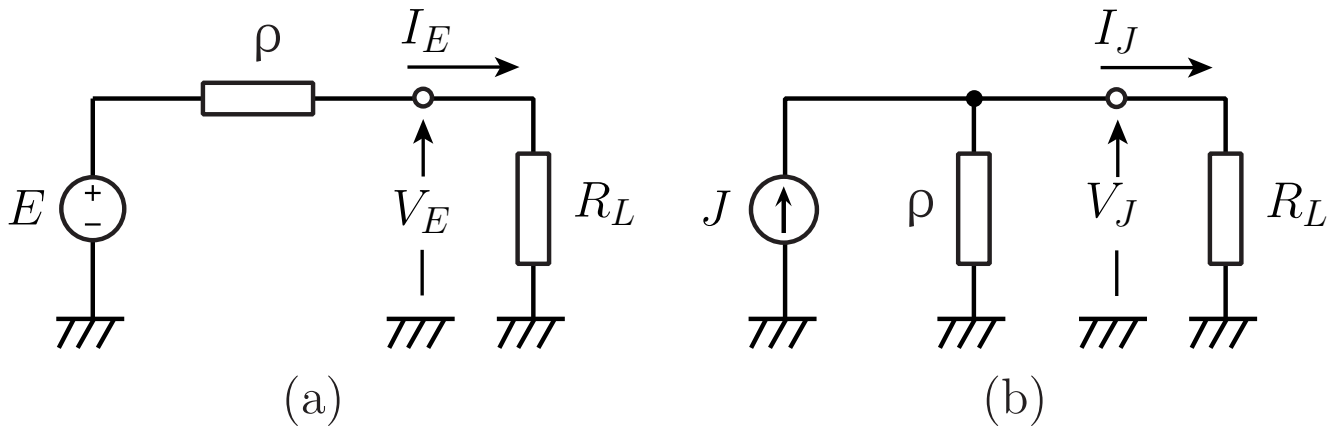

$$I_E = \frac{1}{\rho + R_L} E, \qquad V_E = \frac{R_L}{\rho + R_L} E$$

$$I_J = \frac{\rho}{\rho + R_L} J, \qquad V_J = \frac{R_L \rho}{\rho + R_L} J$$

$$\boxed{E = \rho J}$$

Linearity and Superposition Theory

Linearity

$x \rightarrow y$: Expression for relation between input x and output y

$a_1, \quad a_2$: arbitrary constants

$$x_1 \rightarrow y_1, \quad x_2 \rightarrow y_2$$

$$\downarrow$$

$$\boxed{a_1 x_1 + a_2 x_2 \rightarrow a_1 y_1 + a_2 y_2}$$

Resistor

$$\text{Input}: I, \text{Output}: V, \text{Resistance}: R$$

$$a_1 I_1 + a_2 I_2 \rightarrow R(a_1 I_1 + a_2 I_2) = a_1 R I_1 + a_2 R I_2 = a_1 V_1 + a_2 V_2$$

Question : Prove that capacitors and inductors are linear elements.

Linear Circuit

Circuit composed of linear elements only.

Superposition Theorem

Any voltages and currents of a linear circuit including plural independent sources are found by considering each source separately and then adding the individual voltages and currents.

$$\boxed{a_1x_1+a_2x_2 \rightarrow a_1y_1+a_2y_2}$$

Assume that $a_1=a_2=1$. x_i : source, y_i : voltage or current

$$x_1+x_2 \rightarrow y_1+y_2$$

$$(x_1+x_2)+x_3 \rightarrow (y_1+y_2)+y_3$$

$$(x_1+x_2+x_3)+x_4 \rightarrow (y_1+y_2+y_3)+y_4$$

Any voltages and currents of a linear circuit including plural Independent sources are found by considering each generator Separately and then adding the individual voltages and currents.

Complex representation

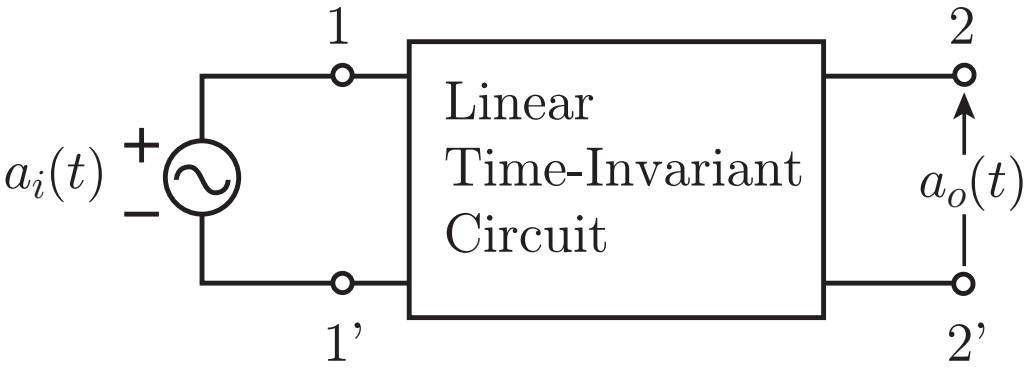

$$a_i(t)=A_i\cos\omega t \rightarrow a_o(t)=A_o\cos(\omega t+\theta)$$

$$b_i(t)=A_i\sin\omega t=A_i\cos(\omega t-\frac{\pi}{2})$$

$$\rightarrow b_o(t)=A_o\cos(\omega t-\frac{\pi}{2}+\theta)=A_o\sin(\omega t+\theta)$$

$$c_i(t)=a_i(t)+jb_i(t)\rightarrow ?$$

$$c_o(t)=a_o(t)+jb_o(t)=A_o\cos(\omega t+\theta)+jA_o\sin(\omega t+\theta)$$

Euler's formula

$$\cos\theta + j\sin\theta = e^{j\theta}$$

$$c_o(t) = A_o\cos(\omega t+\theta) + jA_o\sin(\omega t+\theta) = A_o e^{j(\omega t+\theta)}$$

Complex representation

ωt can be neglected.

Use effective value $A_{oe} = \dfrac{A_o}{\sqrt{2}}$ insted of amplitude A_o.

$$\dot{C}_o = \frac{A_o}{\sqrt{2}} e^{j\theta} = A_{oe} e^{j\theta}$$

Resistor

$$I_R=\sqrt{2}I_{Re}\cos(\omega t+\theta)\rightarrow\dot{I}_R=I_{Re}e^{j\theta}$$

$$V_R=RI_R=R\sqrt{2}I_{Re}\cos(\omega t+\theta)\rightarrow\dot{V}_R=RI_{Re}e^{j\theta}$$

$$\boxed{\dot{V}_R=R\dot{I}_R \qquad \text{(equivalent to Ohm's law)}}$$

Inductor

$$I_L=\sqrt{2}I_{Le}\cos(\omega t+\theta)\rightarrow\dot{I}_L=I_{Le}e^{j\theta}$$

$$V_L=L\frac{dI_L}{dt}=-\omega L\sqrt{2}I_{Le}\sin(\omega t+\theta)=\omega L\sqrt{2}I_{Le}\cos(\omega t+\frac{\pi}{2}+\theta)$$

$$\rightarrow\dot{V}_L=\omega LI_{Le}e^{j(\frac{\pi}{2}+\theta)}=j\omega LI_{Le}e^{j\theta}$$

$$\boxed{\dot{V}_L=j\omega L\dot{I}_L \qquad \text{(extension of Ohm's law)}}$$

Capacitor

$$V_C = \sqrt{2} V_{Ce} \cos(\omega t + \theta) \rightarrow \dot{V}_C = V_{Ce} e^{j\theta}$$

$$I_C = C \frac{dV_C}{dt} = -\omega C \sqrt{2} V_{Ce} \sin(\omega t + \theta) \rightarrow \dot{I}_C = j\omega C V_{Ce} e^{j\theta}$$

$$\boxed{\dot{I}_C = j\omega C \dot{V}_C \qquad \text{(extension of Ohm's law)}}$$

$$\boxed{\dot{V} = Z\dot{I}, \qquad Z : \text{impedance}}$$

$$\boxed{\dot{I} = Y\dot{V}, \qquad Y : \text{admittance}}$$

Thevenin's Theorem

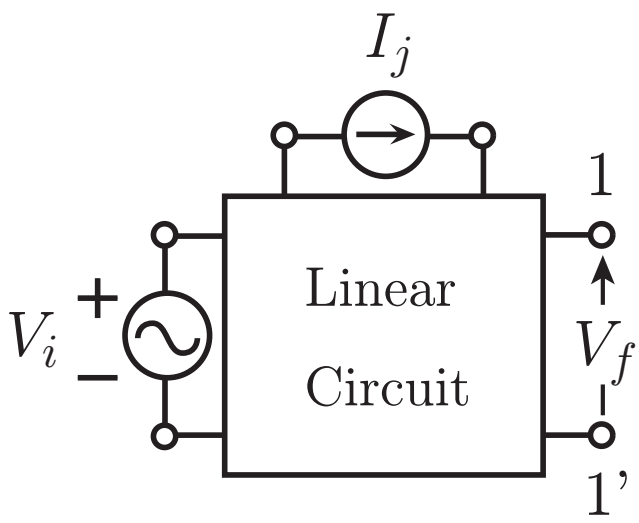

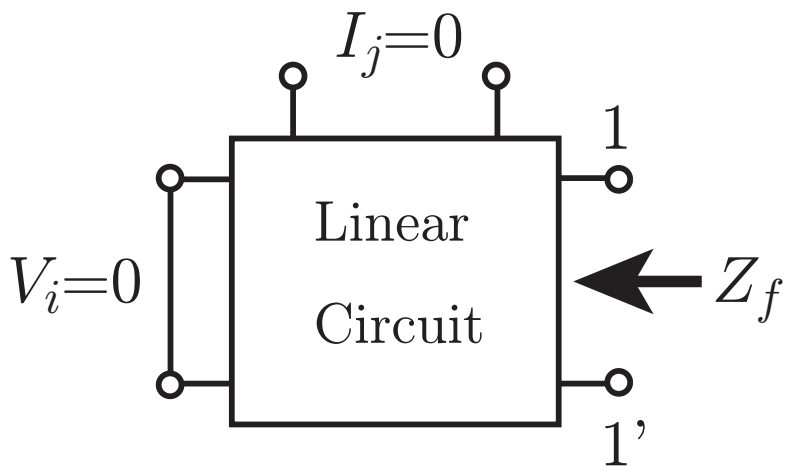

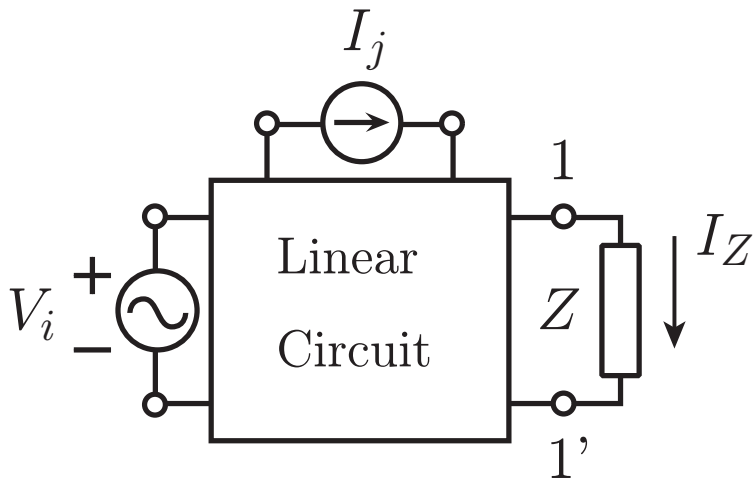

$$I_Z = \frac{V_f}{Z + Z_f}$$

Meaning of Thevenin's Theorem

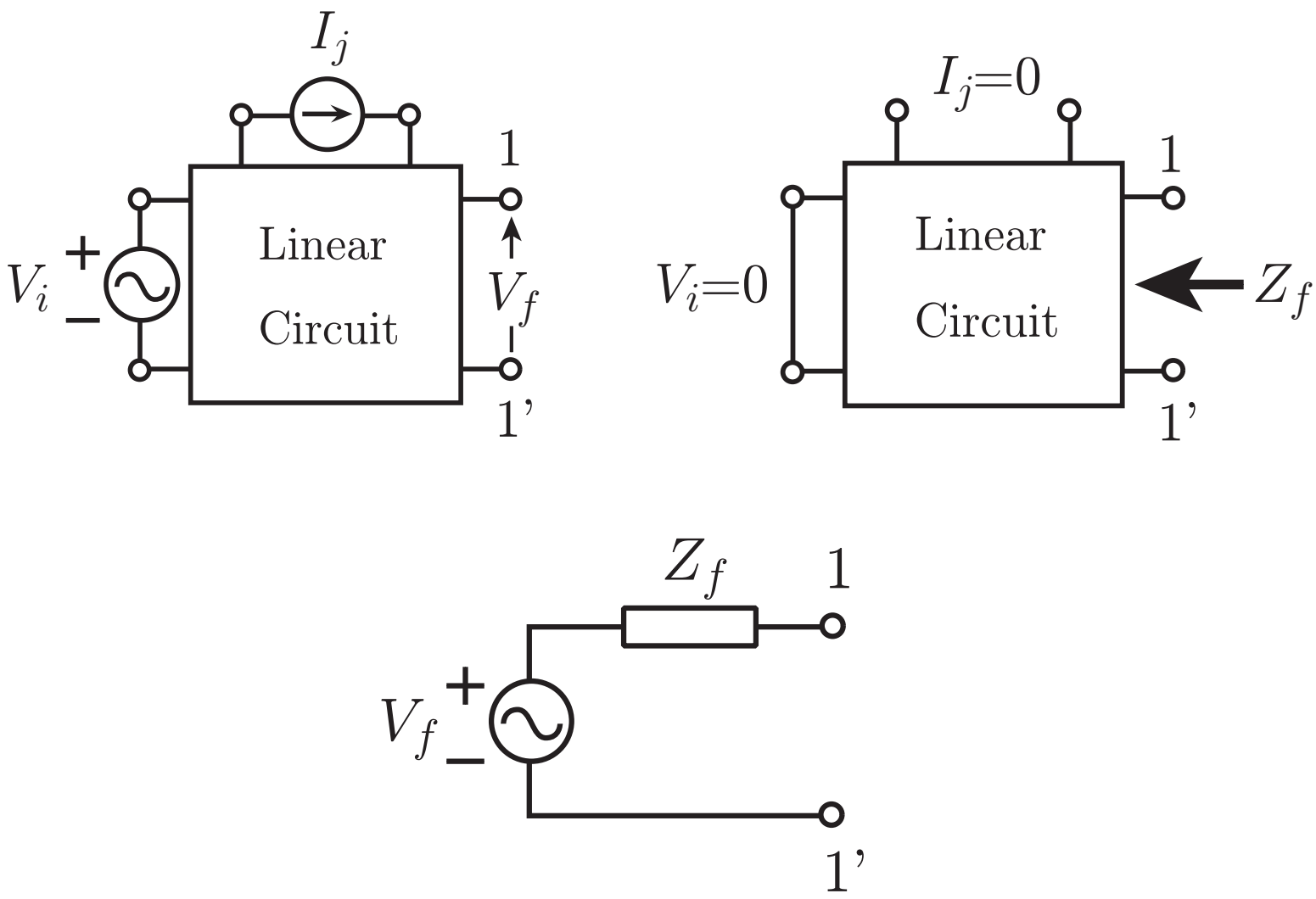

Millman's Theorem

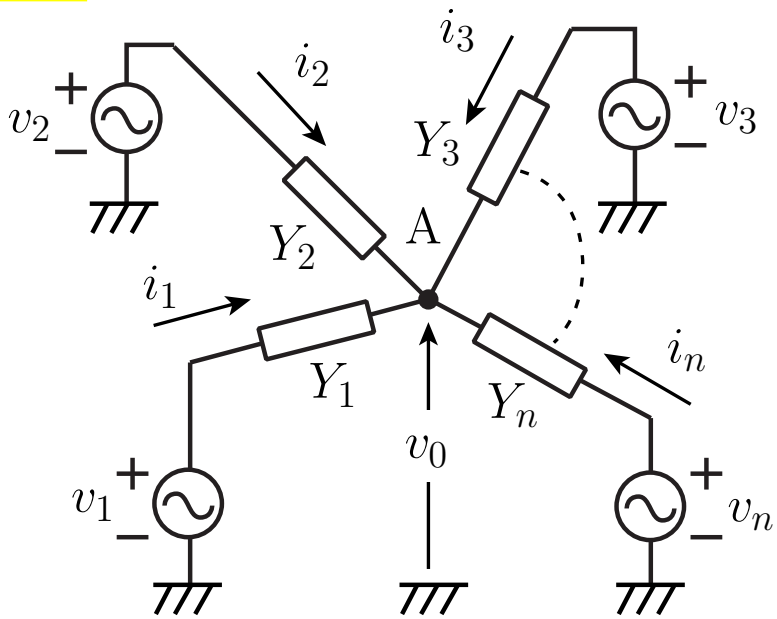

$$Y_1(v_0-v_1)+Y_2(v_0-v_2)+Y_3(v_0-v_3)+\cdots+Y_n(v_0-v_n)=0$$

$$(Y_1+Y_2+Y_3+\cdots+Y_n)v_0=Y_1v_1+Y_2v_2+Y_3v_3+\cdots+Y_nv_n$$

$$\boxed{v_0=\frac{Y_1v_1+Y_2v_2+Y_3v_3+\cdots+Y_nv_n}{Y_1+Y_2+Y_3+\cdots+Y_n}}$$

Time Invariance

$$x(t) \rightarrow y(t)$$

Expression for relation between input $x(t)$ and output $y(t)$

Arbitrary time : t_0

$$\downarrow$$

$$\boxed{\text{If } x(t) \rightarrow y(t), \text{ then } x(t-t_0) \rightarrow y(t-t_0).}$$

$$\boxed{\text{Input : } V(t), \quad \text{Output : } I(t), \quad \text{Capacitance : } C}$$

$$C\frac{dV_C(t-t_0)}{dt}=C\frac{dV_C(x)}{dx}=I_C(x)=I_C(t-t_0)$$

$$\boxed{\text{Input : } I(t), \quad \text{Output : } V(t), \quad \text{Inductance : } L}$$

$$L\frac{dI_L(t-t_0)}{dt}=L\frac{dI_L(x)}{dx}=V_L(x)=V_L(t-t_0)$$

Synthesis of Operational Transconductance Amplifier

Bias offset technique

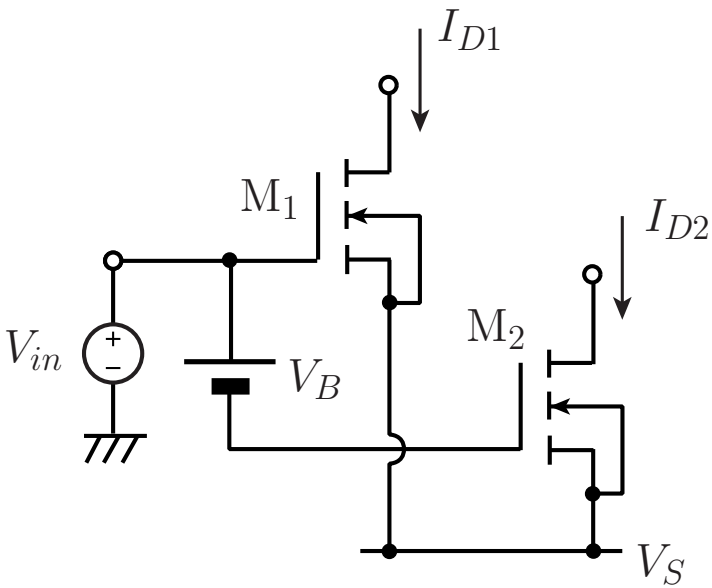

Square law : $I_D = K(V_{GS} - V_T)^2$

$$I_{D1} = K(V_{in} - V_S - V_T)^2$$

$$I_{D2} = K(V_{in} - V_B - V_S - V_T)^2$$

$$I_{D1} - I_{D2} = K(2V_{in} - V_B - 2V_S - 2V_T)V_B$$

$$= 2KV_BV_{in} - K(V_B + 2V_S + 2V_T)V_B$$

Elimination of DC components

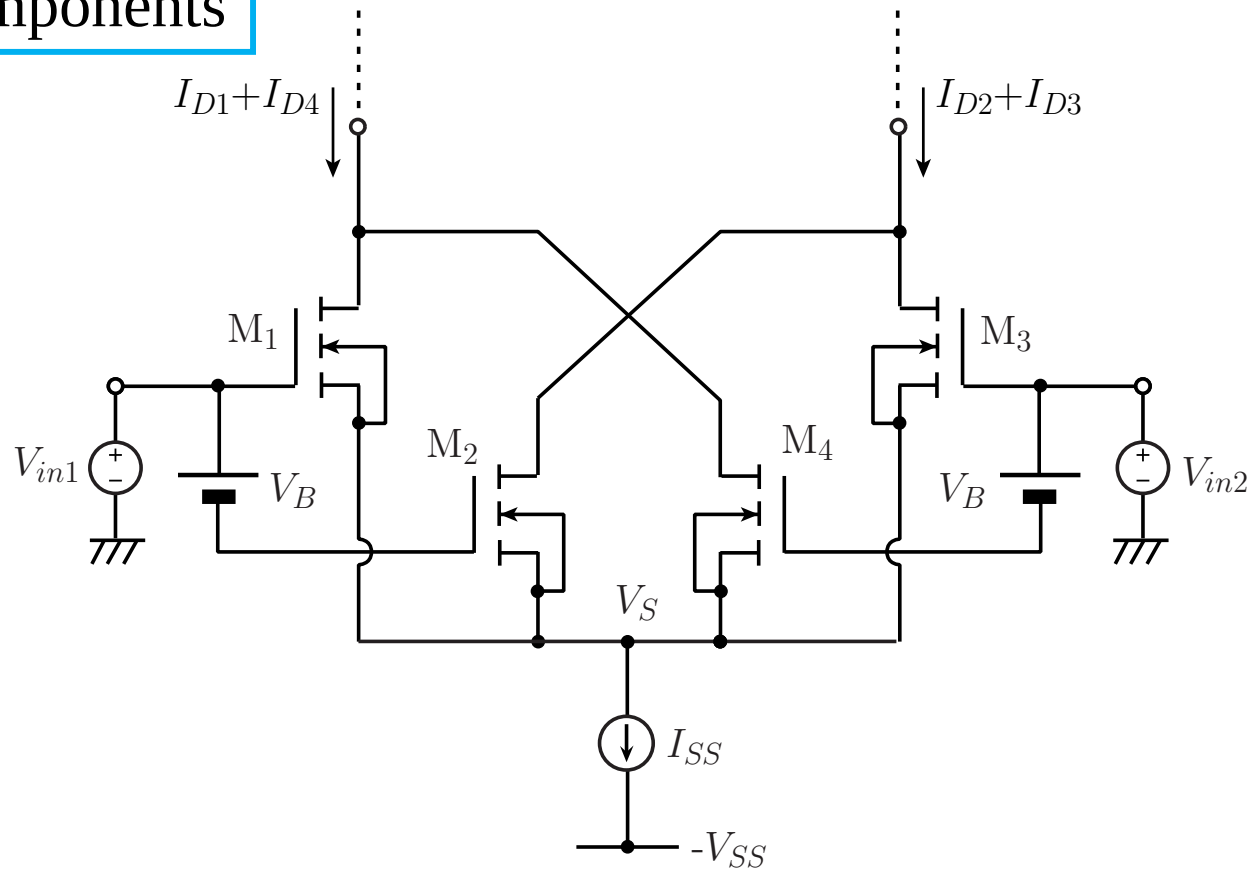

$$I_{D1}-I_{D2}=2KV_BV_{in1}-K(V_B+2V_S+2V_T)V_B$$

$$I_{D3}-I_{D4}=2KV_BV_{in2}-K(V_B+2V_S+2V_T)V_B$$

$$\boxed{\Delta I_{out}=(I_{D1}-I_{D2})-(I_{D3}-I_{D4})=2KV_B(V_{in1}-V_{in2})}$$

Equivalent floating DC voltage source

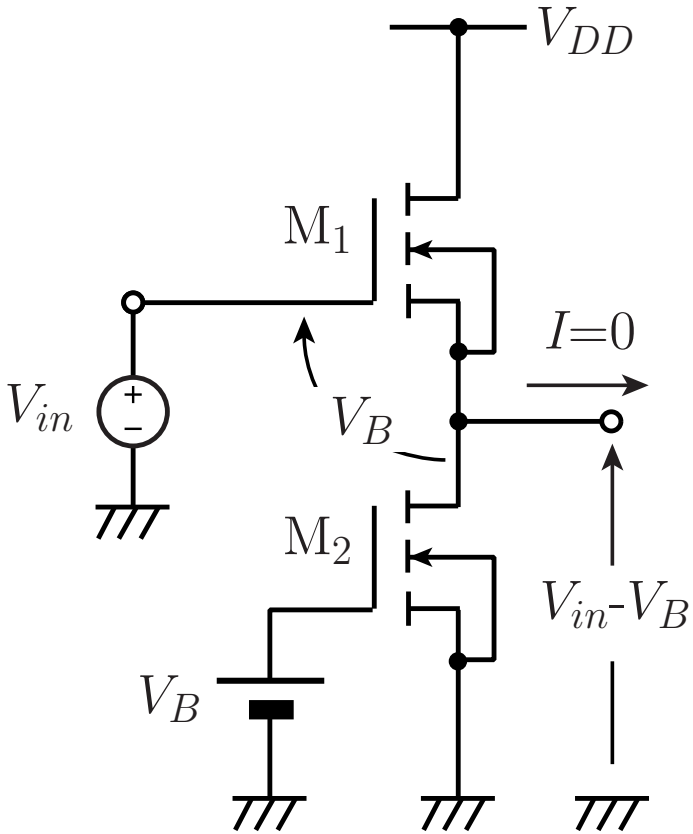

Current mirror for current subtraction

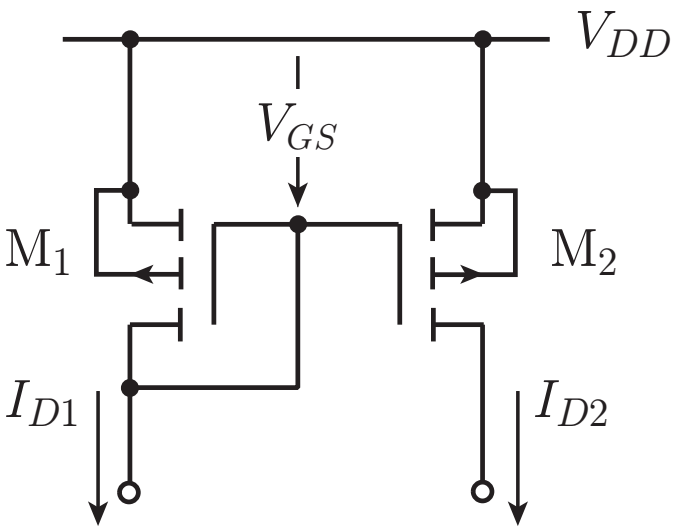

$$I_{D1}=K(V_{GS}-V_T)^2 \qquad I_{D2}=K(V_{GS}-V_T)^2$$

$$\boxed{I_{D1}=I_{D2}}$$

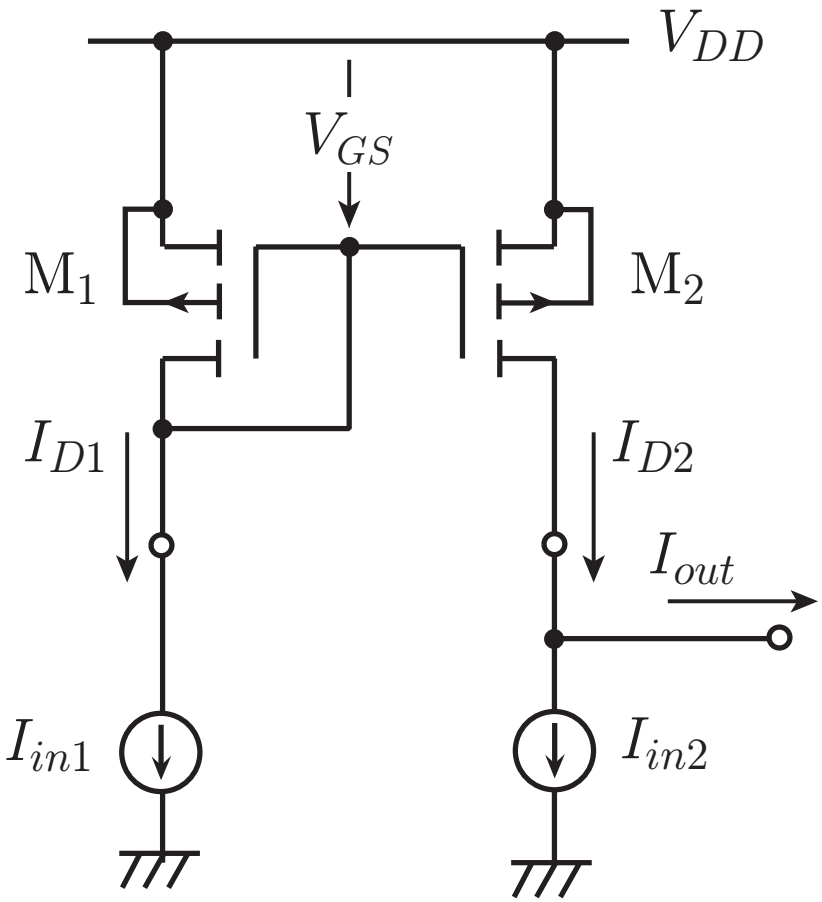

$$I_{out}=I_{D2}-I_{in2}=I_{D1}-I_{in2}=I_{in1}-I_{in2}$$

Current source

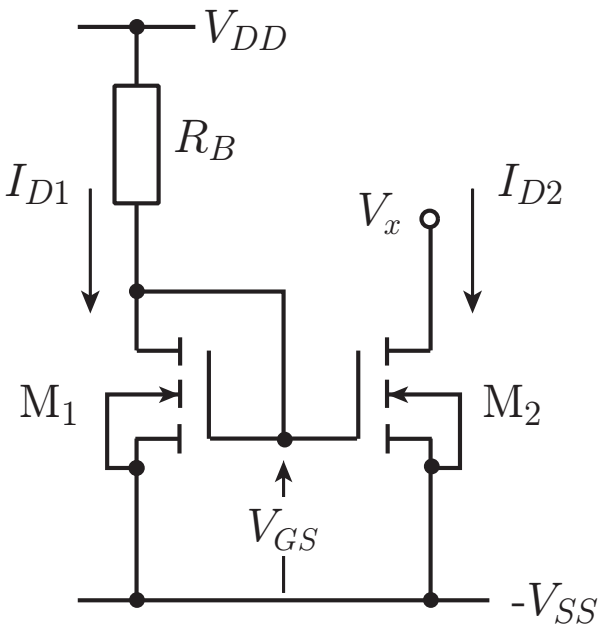

$$I_{D1}=K_1(V_{GS}-V_T)^2$$

$$I_{D1}=\frac{V_{DD}-V_{GS}+V_{SS}}{R_B}$$

$$V_{GS}=V_T-\frac{1}{2KR_B}+\sqrt{\frac{V_{DD}-V_{SS}-V_T}{KR_B}+\frac{1}{4K^2{R_B}^2}}$$

$I_{D2}=K_2(V_{GS}-V_T)^2$: independent of V_x

Electrically controllable OTA using MOS transistors

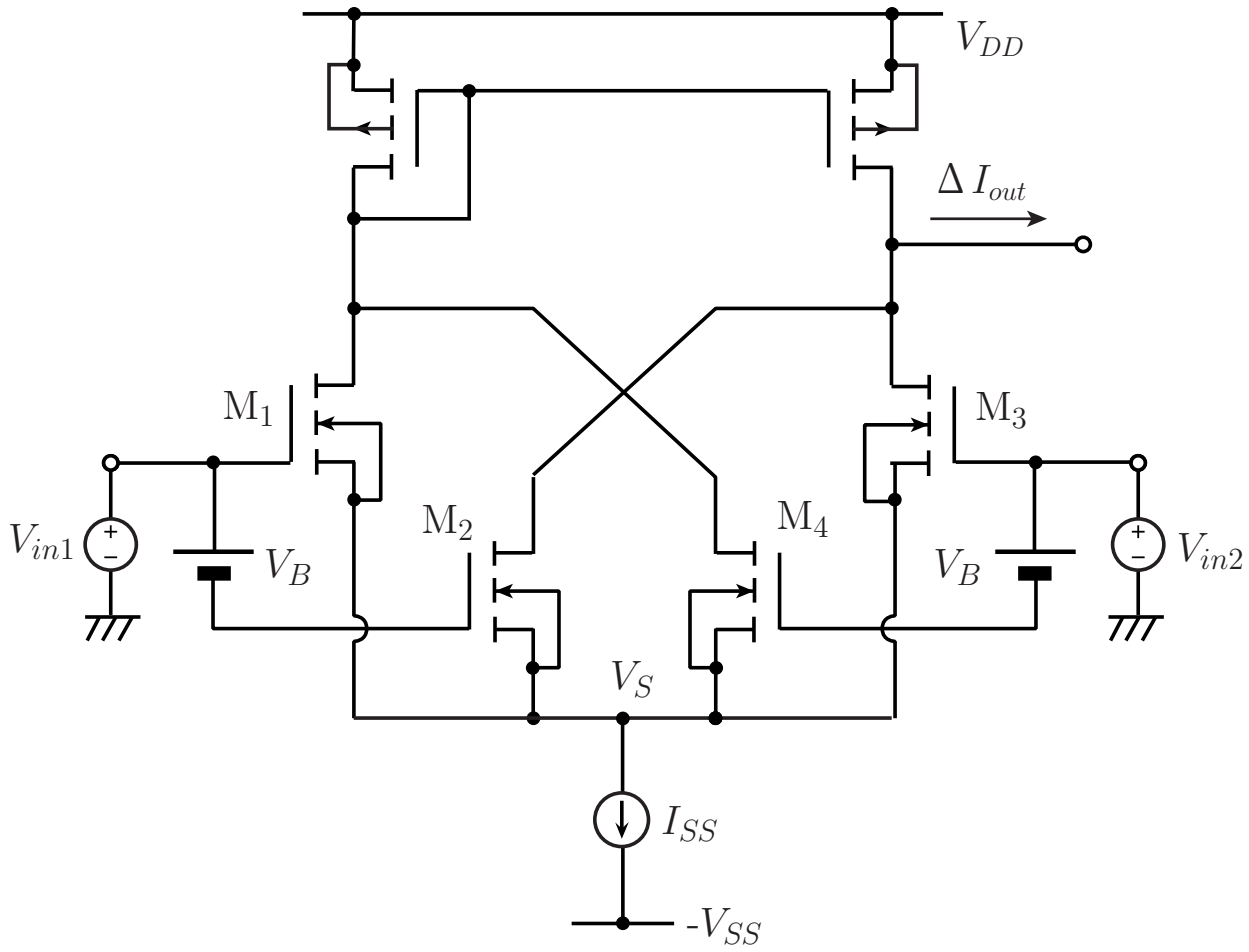

$$\Delta I_{out} = (I_{D1} - I_{D2}) - (I_{D3} - I_{D4}) = 2KV_B(V_{in1} - V_{in2})$$

Applications of OTAs

Symbols of OTA

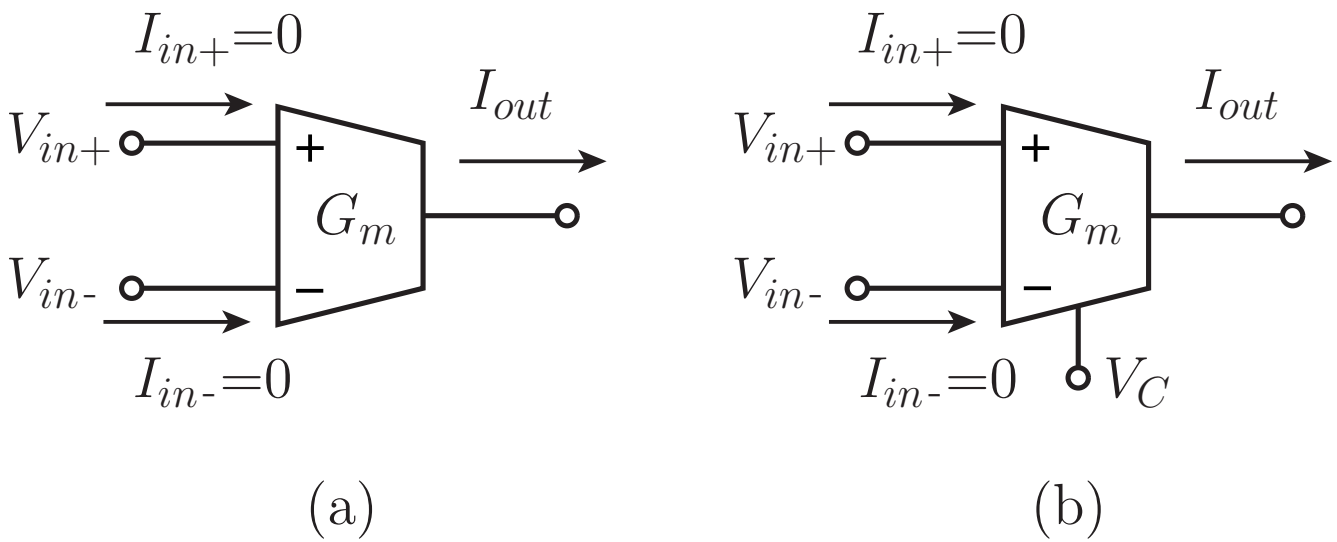

$$I_{out}=G_m(V_{in+}-V_{in-})$$

Resistance realization

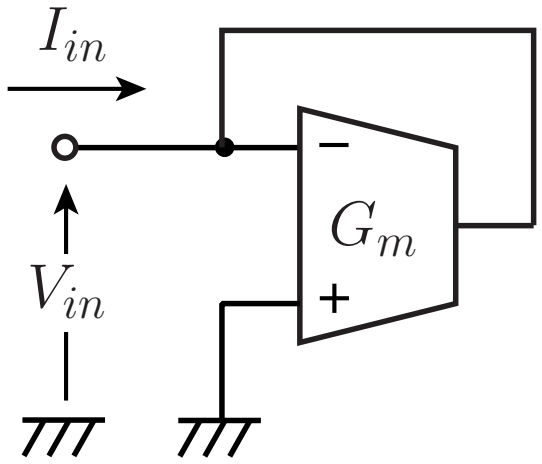

$$I_{in} = G_m V_{in} \rightarrow R_{in} = \frac{V_{in}}{I_{in}} = \frac{1}{G_m}$$

Amplifier realization

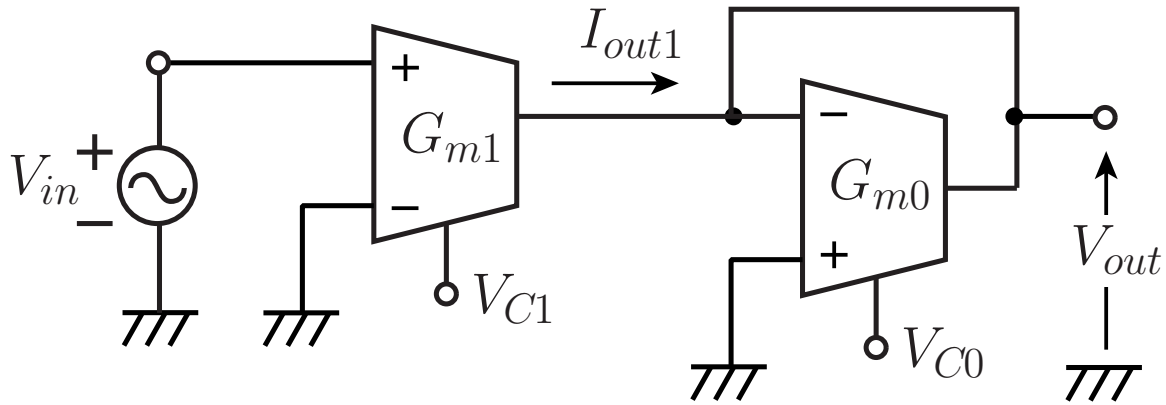

$$V_{out} = \frac{1}{G_{m0}} I_{out1} = \frac{G_{m1}}{G_{m0}} V_{in}$$

Multiplier and divider realization

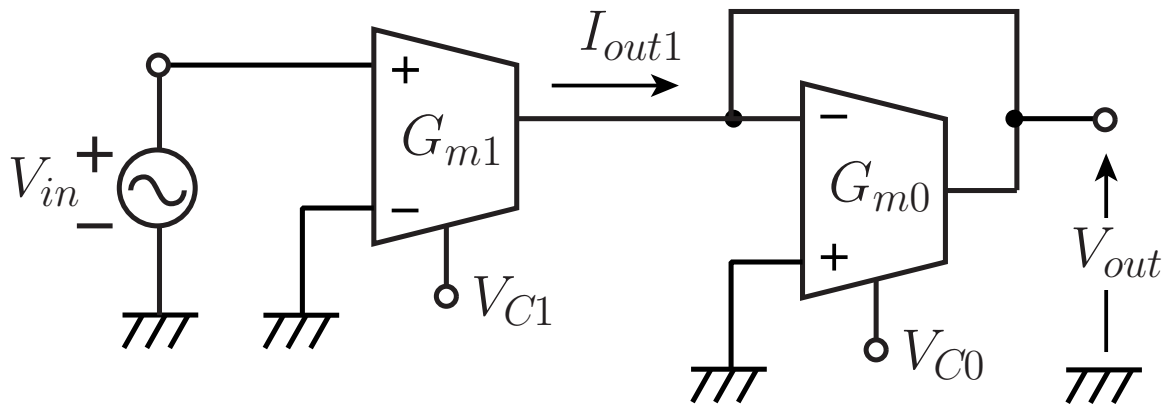

$$G_{m0}=K_{m0}V_{C0},\quad G_{m1}=K_{m1}V_{C1}$$

$$\boxed{V_{out}=\frac{G_{m1}}{G_{m0}}V_{in}=\frac{K_{m1}}{K_{m0}}\cdot\frac{V_{C1}V_{in}}{V_{C0}}}$$

Adder and subtractor realization

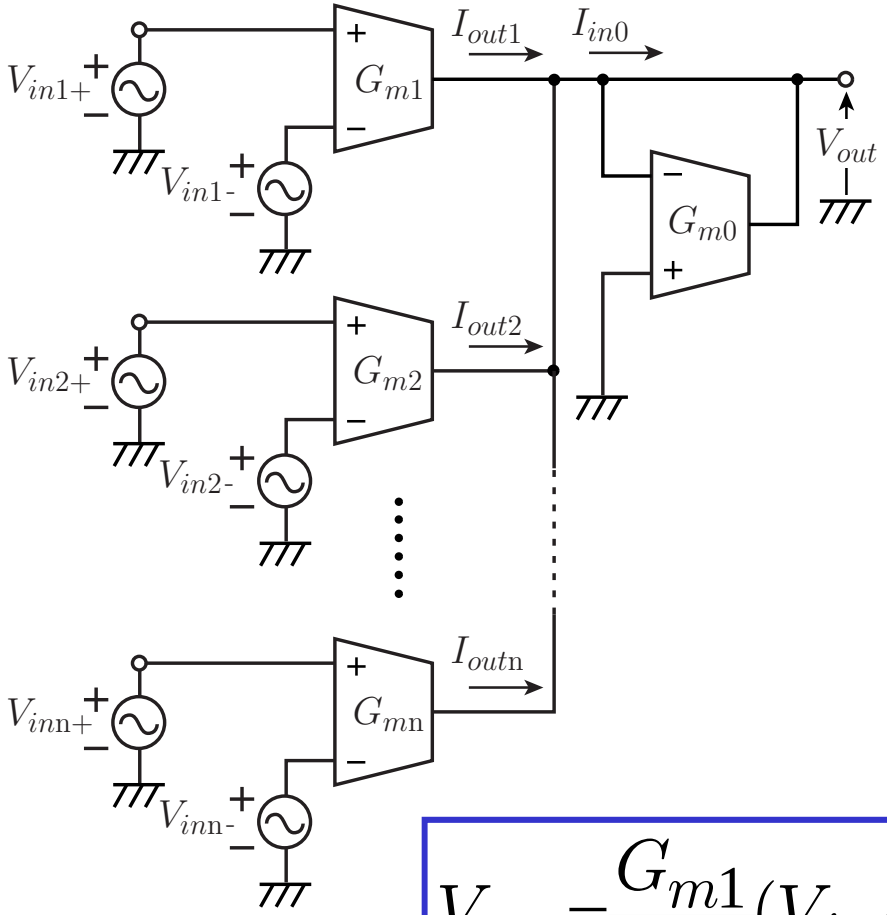

$$I_{in0}=I_{out1}+I_{out2}+\cdots+I_{outn}$$

$$I_{outi}=G_{mi}(V_{ini+}-V_{ini-})$$

$$V_{out}=\frac{G_{m1}}{G_{m0}}(V_{in1+}-V_{in1-})+\frac{G_{m2}}{G_{m0}}(V_{in2+}-V_{in2-})+\cdots$$

$$\cdots+\frac{G_{mn}}{G_{m0}}(V_{inn+}-V_{inn-})$$

Integrator realization

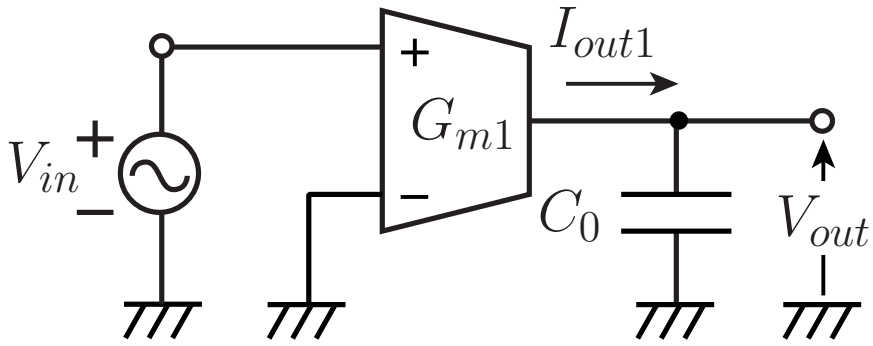

$$V_{out} = \frac{1}{sC_0} I_{out1} = \frac{G_{m1}}{sC_0} V_{in}$$

Inductance realization

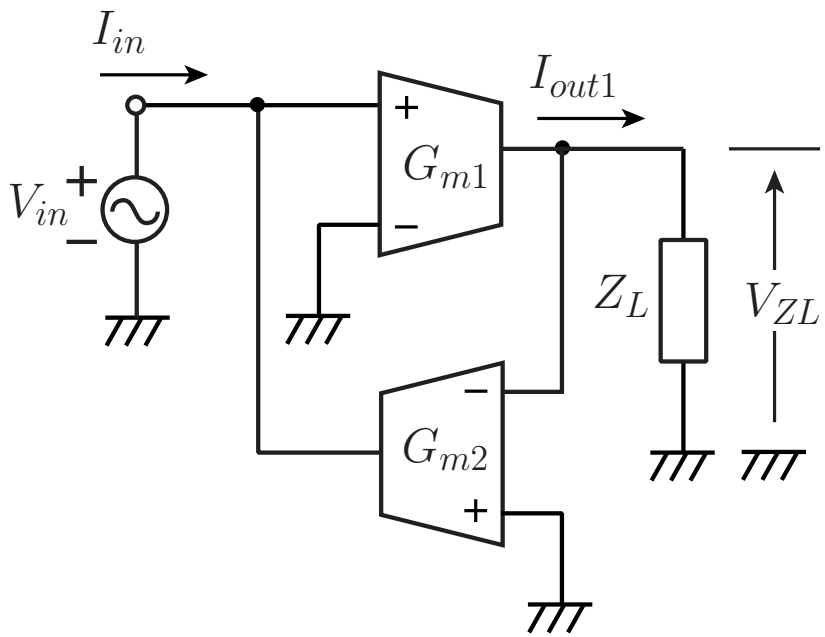

$$V_{ZL}=Z_L I_{out1}=Z_L G_{m1} V_{in}$$

$$I_{in}=G_{m2} V_{ZL}$$

$$\boxed{Z_{in}=\frac{V_{in}}{I_{in}}=\frac{V_{in}}{G_{m2}V_{ZL}}=\frac{V_{in}}{G_{m2}Z_L G_{m1}V_{in}}=\frac{1}{G_{m2}Z_L G_{m1}}}$$

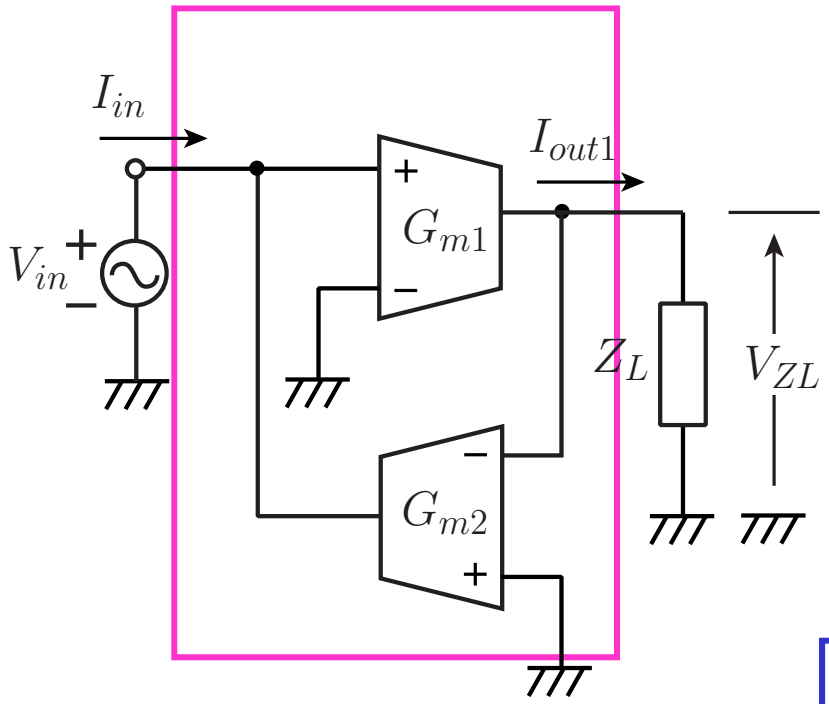

Gyrator

$$Z_L = \frac{1}{sC_L}$$

$$Z_{in} = \frac{1}{G_{m2} Z_L G_{m1}} = s\frac{C_L}{G_{m1} G_{m2}}$$