Kazuya Masu, Tokyo Institute of Technology
Prepared in May 22, 2014

電子デバイス　補足資料（３）

Exercise (Transistor *h*-parameters)

【１】T 形回路パラメータ（α、r_b、r_e、r_c）とベース接地 h パラメータの関係（式(A)、(B)）を求めよ。

Derive the relation between T-parameters ($r_e,\ r_c,\ r_b,\ and\ \alpha$) and the common-base h parameters h_{ijB} $(i,\ j = 1\ and\ 2)$ as shown in Eqs. (A) and (B)

$$\begin{pmatrix} h_{11B} & h_{12B} \\ h_{21B} & h_{22B} \end{pmatrix} = \begin{pmatrix} r_e + (1-\alpha)\dfrac{r_e r_c}{r_b + r_c} & \dfrac{r_b}{r_b + r_c} \\ -\dfrac{r_b + r_c\alpha}{r_b + r_c} \approx -\alpha & \dfrac{1}{r_b + r_c} \end{pmatrix} \quad \cdots (A)$$

$$\begin{pmatrix} r_e = h_{11B} - \dfrac{h_{12B}(1+h_{21B})(1-h_{12B})}{h_{22B}} & r_b = \dfrac{h_{12B}}{h_{22B}} \\ \alpha = -\dfrac{h_{12B} + h_{21B}}{1 - h_{12B}} \approx -h_{21B} & r_c = \dfrac{1 - h_{12B}}{h_{22B}} \end{pmatrix} \quad \cdots (B)$$

【２】T 形回路パラメータ（α、r_b、r_e、r_c）とエミッタ接地 h パラメータの関係（式(C)、(D)）を求めよ。

Derive the relation between T-parameters ($r_e,\ r_c,\ r_b,\ and\ \alpha$) and the common-emitter h parameters h_{ijE} $(i,\ j = 1\ and\ 2)$ as shown in Eqs. (C) and (D)

$$\begin{pmatrix} h_{11E} & h_{12E} \\ h_{21E} & h_{22E} \end{pmatrix} = \begin{pmatrix} r_b + \dfrac{r_e r_c}{(1-\alpha)r_c + r_e} & \dfrac{r_e}{r_e + (1-\alpha)r_c} \\ \dfrac{\alpha r_c - r_e}{r_e + (1-\alpha)r_c} & \dfrac{1}{r_e + (1-\alpha)r_c} \end{pmatrix} \quad \cdots (C)$$

$$\begin{pmatrix} r_e = \dfrac{h_{12E}}{h_{22E}} & r_b = h_{11E} - \dfrac{h_{12E}(1+h_{21E})}{h_{22E}} \\ \alpha = \dfrac{h_{12E} + h_{21E}}{1 + h_{21E}} & r_c = \dfrac{1 + h_{21E}}{h_{22E}} \end{pmatrix} \quad \cdots (D)$$

【３】一般に、ベース接地等価回路の h パラメータを測定し、T 形等価回路パラメータを用い、次にエミッタ接地 h パラメータ求める。今、ベース接地の h パラメータが次のように測定された。T 形等価回路パラメータとエミッタ接地 h パラメータを求めよ。

In general, the common-base *h* parameters h_{ijB} $(i,\ j = 1\ and\ 2)$ is measured. Then, T-parameters $(r_e,\ r_c,\ r_b,\ and\ \alpha)$ are calculated from h_{ijB} $\left(i,\ j = 1\ and\ 2\right)$. The following common-base h parameters h_{ijB} $(i,\ j = 1\ and\ 2)$ were measured. Calculate the T-parameters $(r_e,\ r_c,\ r_b,\ and\ \alpha)$ and then the common-emitter h parameters h_{ijE} $(i,\ j = 1\ and\ 2)$.

$$\begin{pmatrix} h_{11B} & h_{12B} \\ h_{21B} & h_{22B} \end{pmatrix} = \begin{pmatrix} 25\ [\Omega] & 2.0 \times 10^{-4} \\ -0.98 & 0.4[\mu S] \end{pmatrix}$$

In the following, at first the definition of h-parameters is described in section (1).

In section (2), T-parameters $(r_e,\ r_c,\ r_b,\ and\ \alpha)$ are expressed by the common-base *h* parameters h_{ijB}, *i.e.*, derivation of Eq. (A). In section (3), the common-base *h* parameters h_{ijB} is expressed by T-parameters $(r_e,\ r_c,\ r_b,\ and\ \alpha)$, *i.e.*, derivation of Eq. (B).

In section (4), T-parameters $(r_e,\ r_c,\ r_b,\ and\ \alpha)$ are expressed by the common-emitter *h* parameters h_{ijE} , *i.e.*, derivation of Eq. (C). In section (5), the common-emitter *h* parameters h_{ijE} is expressed by T-parameters $(r_e,\ r_c,\ r_b,\ and\ \alpha)$, *i.e.*, derivation of Eq. (D).

In section (6), another way of derivation of the relation between the common-emitter *h* parameters h_{ijE} and from common-base *h* parameters h_{ijB}

In section (7), answers of calculation quiz are described.

Section (1)では h パラメータの定義を示す。

Section (2)では、T 型等価回路パラメータ $(r_e,\ r_c,\ r_b,\ and\ \alpha)$ をベース接地 h パラメータh_{ijB} で表す（Eq. (A)の導出）. Section (3)では、ベース接地 h パラメータh_{ijB}を T 型等価回路パラメータ $(r_e,\ r_c,\ r_b,\ and\ \alpha)$で表す（Eq. (B)の導出）.

Section (4)では、T 型等価回路パラメータ $(r_e,\ r_c,\ r_b,\ and\ \alpha)$ をエミッタ接地 h パラメータh_{ijE} で表す（Eq. (C)の導出）. Section (5)ではエミッタ接地 h パラメータh_{ijB} を T 型等価回路パラメータ $(r_e,\ r_c,\ r_b,\ and\ \alpha)$で表す（Eq. (D)の導出）.

Section(6)では、ベース接地 h パラメータとエミッタ接地 h パラメータの別の求め方を示す。

Section (7)では数値計算例が示されている。

(1) Definition of h parameters

The h-parameters are defined as eq. (1) for the 2-port network of Fig.1. (図１の２端子対網の h パラメータは第１式で表される。)

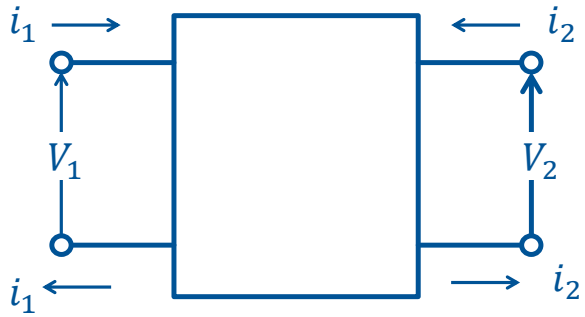

Figure 1. 2-port network. Note the definition of current and voltage direction. The current direction is defined as the currents flows into the network.（２端子対網。電流及び電圧の方向について注意すること電流は入る方向を正にとる。）

$$\begin{pmatrix} v_1 \\ i_2 \end{pmatrix} = \begin{pmatrix} h_{11} & h_{12} \\ h_{21} & h_{22} \end{pmatrix} \begin{pmatrix} i_1 \\ v_2 \end{pmatrix} \qquad \cdots (1)$$

The four parameters h_{ij} $(i, j = 1\ and\ 2)$ are defined as follows.

$$h_{11} = \left.\frac{v_1}{i_1}\right|_{v_2=0} [\Omega],$$

where h_{11} is input impedance with output part short circuited. （出力短絡、入力インピーダンス）

$$h_{21} = \left.\frac{i_2}{i_1}\right|_{v_2=0} [dimention\ less]$$

where h_{21} is Forward current gain with output part short circuited. (出力短絡、電流増幅率）

$$h_{12} = \left.\frac{v_1}{v_2}\right|_{i_1=0} [dimention\ less]$$

where h_{12} is reverse voltage transfer ratio with input part open circuited. （入力開放、電力反射率）

$$h_{22} = \left.\frac{i_2}{v_2}\right|_{i_1=0} [mho,\ \Omega^{-1}]$$

where h_{21} is output admittance with input part open circuited. （入力開放、出力アドミタンス）

(2) Common-base h parameters h_{ijB} $(i,\ j = 1\ and\ 2)$ using T-parameters $(r_e,\ r_c,\ r_b,\ and\ \alpha)$

Figure 2 is the common-base T-type equivalent circuit. In the following, based on this equivalent circuit, h-parameters of h_{ijB} $(i,\ j = 1\ and\ 2)$ is derived, where suffix B denotes the common –base. （図２のベース接地 T 形等価回路をもとにベース接地 h パラメータ$[h_{ijB}]$ を求める。

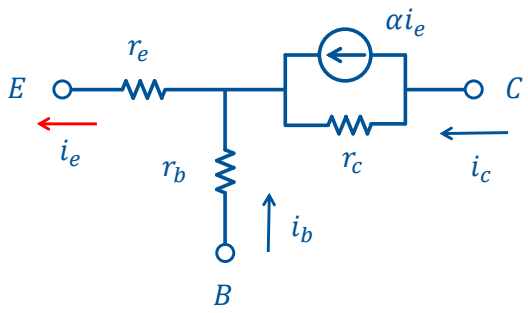

Figure 2 Common base T-type equivalent circuit. （ベース接地 T 形等価回路）

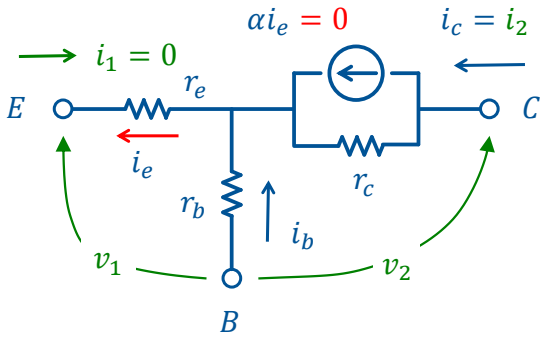

Figure 3 Common base-T-type circuit with the emitter terminal open circuited. （エミッタ端子を開放したベース接地 T 形等価回路）

h_{12B} and h_{22B} are derived from the common base transistor with the input part (emitter) open circuited in Fig. 3. （h_{12B}とh_{22B}は、図３のように入力端子（エミッタ端子）を開放した回路から求める。

$$v_1 = \frac{r_b}{r_c + r_b} v_2, \qquad \therefore h_{12B} = \frac{v_1}{v_2} = \frac{r_b}{r_c + r_b} \qquad \cdots (1)$$

$$i_2 = \frac{v_2}{r_c + r_b}, \qquad \therefore h_{22B} = \frac{i_2}{v_2} = \frac{1}{r_c + r_b} \qquad \cdots (2)$$

h_{11B} and h_{21B} are derived from the common-base transistor with output part (C-B) short circuited in Fig. 4 （h_{11B}とh_{21B} は、出力端子（コレクターベース間）を短絡した図４の回路から求める）

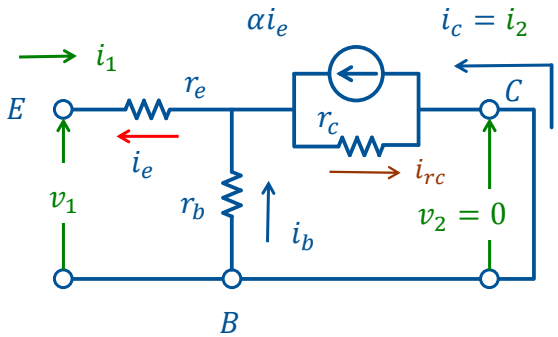

Figure 4. Common base-T-type circuit with the output part (collector-base terminal) short circuited.

From the following circuit equations, h_{11B} and h_{21B} are obtained.

$$\begin{cases} v_1 = r_e i_1 - r_b\, i_b & \cdots (3) \\ i_1 = -i_b + i_{rc} + \alpha i_1 & \cdots (4) \\ i_2 = -i_{rc} - \alpha i_1 & \cdots (5) \\ r_b\, i_b = -\, r_c\, i_{rc} & \cdots (6) \end{cases}$$

Eq. (6) is substituted into Eq. (4).

$$i_{rc} = (1-\alpha)\frac{r_b}{r_c + r_b} i_1 \quad \cdots (7)$$

Eq. (7) is substituted into Eq. (5).

$$i_2 = -\frac{r_b - \alpha r_b + \alpha r_c + \alpha r_b}{r_c + r_b} i_1$$

$$\therefore h_{21B} = \frac{i_2}{i_1} = -\frac{\alpha r_c \;\; r_b}{r_c + r_b} \quad \cdots (8)$$

Equation (7) is substituted into Eq. (4)

$$-r_b i_b = (1-\alpha) r_c \frac{r_b}{r_c + r_b} i_1 \quad \cdots (9)$$

Equation (9) is substituted into Eq. (3).

$$v_1 = r_e i_1 + \frac{(1-\alpha)\, r_b r_c}{r_c + r_b} i_1$$

$$\therefore \quad h_{11B} = \frac{v_1}{i_1} = r_e + \frac{(1-\alpha)\, r_b r_c}{r_c + r_b} \quad \cdots (10)$$

Therefore, $h_{ijB}(i, j = 1\ and\ 2)$ are obtained in eqs. (1), (2), (8) and (10).

$$\begin{pmatrix} h_{11B} & h_{12B} \\ h_{21B} & h_{22B} \end{pmatrix} = \begin{pmatrix} r_e + (1-\alpha)\dfrac{r_b r_c}{r_b + r_c} \;\; \cdots (a) & \dfrac{r_b}{r_b + r_c} \;\; \cdots (b) \\ -\dfrac{r_c \alpha + r_b}{r_b + r_c} \;\; \cdots (c) & \dfrac{1}{r_b + r_c} \;\; \cdots (d) \end{pmatrix} \quad \cdots (11)$$

If $r_c \gg r_b$, $h_{21B} \approx -\alpha$ as shown in Eq. (c) of Eq. (11).

(3) T-parameters ($r_e,\ r_c,\ r_b,\ and\ \alpha$) using common-base h parameters h_{ijB} ($i,\ j = 1\ and\ 2$)

Next, T-parameters of $r_e,\ r_c,\ r_b,\ and\ \alpha$ are expressed by $[h_{ijB}]$. From h_{12B} and h_{22B},

$$r_b = \frac{h_{12B}}{h_{22B}} \qquad \cdots (12)$$

From h_{22B},

$$r_c = \frac{1}{h_{22B}} - r_B = \frac{1}{h_{22B}} - \frac{h_{12B}}{h_{22B}}$$

$$\therefore \quad r_c = \frac{1 - h_{12B}}{h_{22B}} \qquad \cdots (13)$$

Equations (12) and (13) are substituted into Eq. (8).

$$h_{21B} = -h_{22B}\left(\frac{h_{12B}}{h_{22B}} + \alpha\frac{1 - h_{12B}}{h_{22B}}\right)$$

$$\therefore\ \alpha = -\frac{h_{21B} + h_{12B}}{1 - h_{12B}} \qquad \cdots (14)$$

From Eq. (14),

$$1 - \alpha = \frac{1 + h_{21B}}{1 - h_{12B}} \qquad \cdots (15)$$

Equations (15), (d), and (13) are substituted into Eq. (a)

$$h_{11B} = r_e + \frac{1 + h_{21B}}{1 - h_{12B}} h_{12B} \frac{1 - h_{12B}}{h_{22B}}$$

$$h_{11B} = r_e + \frac{h_{12B}}{h_{22B}}\left(1 + h_{21B}\right)$$

$$r_e = h_{11B} - \frac{h_{12B}}{h_{22B}}\left(1 + h_{21B}\right) \qquad \cdots (16)$$

From equations (12), (13), (14) and (16), T-parameters are expressed by h-parameters as in Eq. (17).

$$\begin{pmatrix} r_e = h_{11B} - \dfrac{h_{12B}(1 + h_{21B})}{h_{22B}} & r_b = \dfrac{h_{12B}}{h_{22B}} \\ \alpha = -\dfrac{h_{12B} + h_{21B}}{1 - h_{12B}} & r_c = \dfrac{1 - h_{12B}}{h_{22B}} \end{pmatrix} \qquad (17)$$

In the derivation of Eq. (17), any approximation is not involved.

If h-parameters are expressed by the following approximated form of Eq (11a), the T-parameters are expressed as in Eq, (17a).

$$\begin{pmatrix} h_{11B} & h_{12B} \\ h_{21B} & h_{22B} \end{pmatrix} = \begin{pmatrix} r_e + (1-\alpha)\dfrac{r_b r_c}{r_b + r_c} \quad \cdots (a) & \dfrac{r_b}{r_b + r_c} \quad \cdots (b) \\ -\alpha \quad \cdots (ca) & \dfrac{1}{r_b + r_c} \quad \cdots (d) \end{pmatrix} \qquad \cdots (11a)$$

$$\begin{pmatrix} r_e = h_{11B} - \dfrac{h_{12B}(1 + h_{21B})\,(1 - h_{12B})}{h_{22B}} & r_b = \dfrac{h_{12B}}{h_{22B}} \\ \alpha = -h_{21B} & r_c = \dfrac{1 - h_{12B}}{h_{22B}} \end{pmatrix} \qquad (17a)$$

It is noted that, although the expression of Eq. (17a) is sometimes seen in the text books, the expression of Eq (17a) is approximated one.　（17 式をよくみかけることがあるが、これは$\alpha = -h_{21B}$としたと近似したときの近似表現である）

(4) Common-emitter h parameters h_{ijE} $(i, j = 1\ and\ 2)$ using T-parameters (r_e, r_c, r_b, $and\ \alpha$)

In this section, the common-emitter h-parameters are expressed by T-parameters. Figure 5 is the common-emitter T-type equivalent circuit using an emitter current gain α. The difference between Fig.2 and Fig. 5 is the exchange the position of base and emitter. In the following, based on this equivalent circuit, the common-emitter h-parameters of h_{ijE} $(i, j = 1\ and\ 2)$ is derived, where suffix E denotes the common –emitter.（ここでは、図２のベース接地 T 形等価回路で、ベース端子とエミッタ端子を入れ替えただけの回路から、エミッタ接地 h パラメータを求める。従属電流源は α i_e で表現したままで求めている）

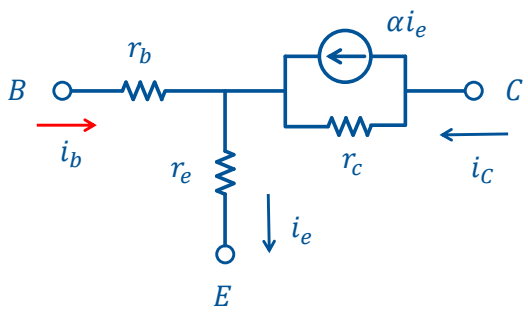

Figure 5. Common-emitter T-type equivalent circuit using emitter current gain α.

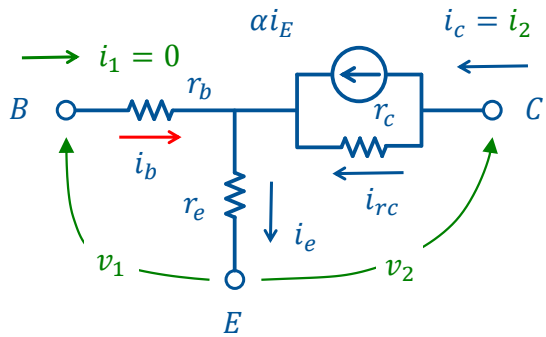

Figure 6. Common-emitter-T-type circuit with the base terminal open circuited.

h_{12E} and h_{22E} are derived from the common-emitter transistor with the input part (base) open circuited as shown in Fig. 6. The circuit equations of Fig. 6 are as follows.

$$\begin{cases} i_e = i_2 & \cdots (18) \\ i_e = i_{rc} + \alpha i_e \ \rightarrow \ (1-\alpha) i_e = i_{rc} & \cdots (19) \\ v_2 = r_e\, i_e + r_c\, i_{re} & \cdots (20) \end{cases}$$

From Eqs. (18) and (19), $(1-\alpha) i_2 = i_{rc}$ $\cdots (21)$

Equations (18) and (21) are substituted into Eq. (20).

$$v_2 = r_e\, i_2 + r_c (1-\alpha) i_2$$

$$\therefore\ h_{22B} = \frac{i_2}{v_2} = \frac{1}{r_e + r_c(1-\alpha)} \qquad \cdots (22)$$

Because $i_1 = 0$, $v_1 = r_e\, i_e$, so that $v_1 = r_e\, i_2$ $\cdots (23)$

Equation (22) is substituted into Eq. (23).

$$v_1 = r_e \frac{1}{r_e + r_c(1-\alpha)} v_2$$

$$\therefore\ h_{12E} = \frac{v_1}{v_2} = \frac{r_e}{r_e + r_c(1-\alpha)} \qquad \cdots (24)$$

$h_{11\mathrm{E}}$ and $h_{21\mathrm{E}}$ are derived from the common-emitter transistor with output part (C-E) short circuited in Fig. 7

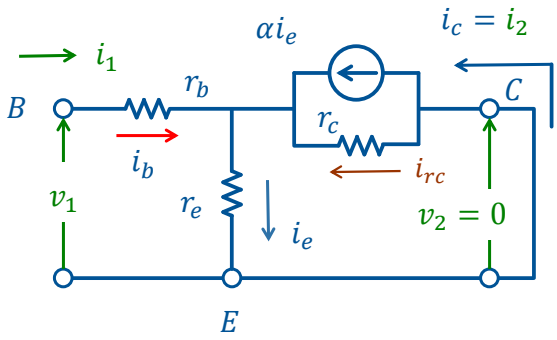

Figure 7. Common-emitter-T-type circuit with the output part (collector-emitter terminal) short circuited.

The circuit equations of Fig. 7 are as follows.

$$\begin{cases} v_1 = r_b i_1 + r_e\, i_e & \cdots (25) \\ i_1 = i_e - i_{rc} - \alpha i_{\mathrm{e}} \quad \rightarrow \quad i_1 = (1-\alpha) i_e - i_{rc} & \cdots (26) \\ i_2 = i_{rc} + \alpha i_{\mathrm{e}} & \cdots (27) \\ r_e\, i_e = -\, r_c\, i_{rc} & \cdots (28) \end{cases}$$

Eq. (28) is substituted into Eq. (26).

$$i_1 = \frac{-\, r_c}{r_e} i_{rc} - i_{rc} + \alpha \frac{r_c}{r_e} i_{rc}$$

$$i_1 = -\left\{ 1 + (1-\alpha)\frac{r_c}{r_e} \right\} i_{rc} \quad \cdots (29)$$

Eq. (28) is substituted into Eq. (27).

$$i_2 = i_{rc} - \alpha \frac{r_c}{r_e} i_{rc}$$

$$i_2 = -\frac{\alpha\, r_c - r_e}{r_e} i_{rc} \quad \cdots (30)$$

From Eqs.(29) and (39),

$$h_{21E} = \frac{i_2}{i_1} = \frac{\dfrac{\alpha\, r_c - r_e}{r_e}}{1 + (1-\alpha)\dfrac{r_c}{r_e}} = \frac{\alpha\, r_c - r_e}{(1-\alpha)\, r_c + r_e} \quad \cdots (31)$$

From Eqs. (28) and (29),

$$i_1 = +\left\{ \frac{r_e}{r_c} + (1-\alpha) \right\} i_e$$

$$i_e = \frac{r_c}{r_e + (1-\alpha)\, r_c} i_1 \qquad \cdots (32)$$

Equation (32) is substituted into Eq. (25)

$$v_1 = r_b i_1 + r_e \frac{r_c}{r_e + (1-\alpha)\ r_c} i_1$$

$$\therefore\ h_{11B} = \frac{v_1}{i_1} = r_b + \frac{r_c\, r_e}{r_e + (1-\alpha)\ r_c} \qquad \cdots (33)$$

Therefore, $h_{ijE}\big(i, j = 1\ and\ 2\big)$ are obtained in eqs. (22), (24), (31) and (33).

$$\begin{pmatrix} h_{11E} & h_{12E} \\ h_{21E} & h_{22E} \end{pmatrix} = \begin{pmatrix} r_b + \dfrac{r_e r_c}{(1-\alpha)r_c + r_e} \cdots (e) & \dfrac{r_e}{r_e + (1-\alpha)r_c} \cdots (f) \\ \dfrac{\alpha r_c - r_e}{(1-\alpha)r_c + r_e} \cdots (g) & \dfrac{1}{r_e + (1-\alpha)r_c} \cdots (h) \end{pmatrix} \cdots (34)$$

(5) T-parameters ($r_e,\ r_c,\ r_b,\ and\ \alpha$) using common-emitter h parameters h_{ijE} $(i,\ j = 1\ and\ 2)$

Next, T-parameters of $r_e,\ r_c,\ r_b,\ and\ \alpha$ are expressed by $[h_{ijE}]$. From (g) of Eq. (24),

$$1 + h_{21E} = \frac{r_c}{(1-\alpha)r_c + r_e} \quad \cdots (35)$$

From (h) and Eq. (35),

$$h_{22E} = \frac{1 + h_{21E}}{r_c}$$

$$r_c = \frac{1 + h_{21E}}{h_{22E}} \quad \cdots (36)$$

From (f) and (h),

$$r_e = \frac{h_{12E}}{h_{22E}} \quad \cdots (37)$$

Equations (36 and (f) are substituted into (e),

$$h_{11E} = r_b + h_{12E}\frac{1 + h_{21E}}{h_{22E}}$$

$$\therefore\ r_b = h_{11E} - \frac{h_{12E}\ (1 + h_{21E}\ )}{h_{22E}} \quad \cdots (38)$$

From equations (36), (37) and (g),

$$h_{21E} = h_{22E}\left(\alpha\frac{1 + h_{21E}}{h_{22E}} - \frac{h_{12E}}{h_{22E}}\right)$$

$$\frac{h_{21E} + h_{12E}}{h_{22E}} = \alpha\frac{1 + h_{21E}}{h_{22E}}$$

$$\therefore\ \alpha = \frac{h_{21E} + h_{12E}}{1 + h_{21E}} \quad \cdots (39)$$

From equations (36), (37), (38) and (39), T-parameters are expressed by the common-emitter h-parameters as in Eq. (17).

$$\begin{pmatrix} r_e = \dfrac{h_{12E}}{h_{22E}} & r_b = h_{11E} - \dfrac{h_{12E}(1 + h_{21E})}{h_{22E}} \\ \alpha = \dfrac{h_{12E} + h_{21E}}{1 + h_{21E}} & r_c = \dfrac{1 + h_{21E}}{h_{22E}} \end{pmatrix} \quad (40)$$

(6) Derivation of common-emitter h parameters h_{ijE} $(i, j = 1\ and\ 2)$ from common-base h parameters

In the previous section, the common-emitter h-parameters are derived from the equivalent circuit shown in Fig. 5. Figure 8 is a well-known common-emitter equivalent circuit, where the current gain β is used. エミッタ接地 T 形等価回路としてよく知られている図 8 を利用して、エミッタ接地等価回路の h パラメータを求める。回路方程式を解いても良いが、ここでは別の方法を求めて見る）

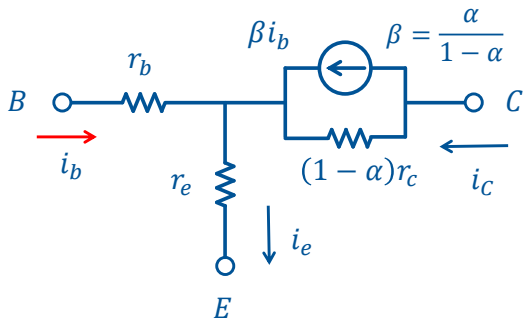

Figure 8. Common-emitter T-type equivalent circuit using current gain β.

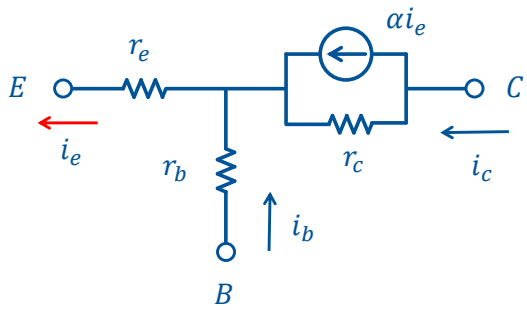

Figure 2 Common base T-type equivalent circuit.

Figure 2 is the common-base T-type equivalent circuit. It is noted that the circuit configuration of Fig. 8 and Fig. 2 are the same. In section (2), the common-base h-parameters are derived as follows. （図 2 はベース接地 T 形等価回路である。）

$$\begin{pmatrix} h_{11B} & h_{12B} \\ h_{21B} & h_{22B} \end{pmatrix} = \begin{pmatrix} r_e + (1-\alpha)\dfrac{r_b r_c}{r_b + r_c} \quad \cdots (a) & \dfrac{r_b}{r_b + r_c} \quad \cdots (b) \\ -\dfrac{r_c\alpha + r_b}{r_b + r_c} \quad \cdots (c) & \dfrac{1}{r_b + r_c} \quad \cdots (d) \end{pmatrix} \qquad \cdots (11)$$

Since the circuit configuration is the same, the common-emitter h parameters should be derived by replacing the circuit parameters. When the T-parameters $(r_e,\ r_c,\ r_b,\ and\ \alpha)$ of Fig. 2 is replaced by the following relations of (41), the h-parameters should be that for the common-emitter equivalent circuit. 図 8 と図 2 を良くみると構造は同じである。抵抗や回路定数には 41 式の関係式があるので、ベース接地等価回路の h パラメータの T 形パラメータを置き換えることで、エミッタ接地等価回路の h パラメータを求めることも可能である）

$$\begin{bmatrix} r_e & \rightarrow & r_b \\ r_b & \rightarrow & r_e \\ r_c & \rightarrow & (1-\alpha)r_c \\ \alpha & \rightarrow & -\beta \end{bmatrix} \qquad \cdots (41)$$

The validity of the replacement is confirmed as follows. The relation

$$1 + \beta = \frac{1}{1-\alpha}$$

is used in the confirmation.

$$h_{11B} = r_e + (1-\alpha)\frac{r_b r_c}{r_b + r_c}$$

$$==\gg \quad h_{11E} = r_b + (1+\beta)\frac{r_e\,(1-\alpha)\,r_c}{r_e + (1-\alpha)r_c} = r_b + \frac{r_e\,r_c}{r_e + (1-\alpha)r_c} \qquad \cdots(42)$$

$$h_{12B} = \frac{r_b}{r_b + r_c}$$

$$==\gg \quad h_{12E} = \frac{r_e}{r_e + (1-\alpha)r_c} \qquad \cdots(43)$$

$$h_{21B} = -\frac{r_c\alpha + r_b}{r_b + r_c}$$

$$==\gg \quad h_{21E} = -\frac{r_c(1-\alpha)\,(-\beta) + r_e}{r_e + (1-\alpha)\,r_c} = \frac{\alpha\,r_c - r_e}{r_e + (1-\alpha)\,r_c} \qquad \cdots(44)$$

$$h_{22B} = \frac{1}{r_b + r_c}$$

$$==\gg \quad h_{22E} = \frac{1}{r_e + (1-\alpha)r_c} \qquad \cdots(45)$$

The common emitter *h* parameters of Eqs. (42), (43), (44), and (45) is the same as Eq. (34).

Next, the expression of T-parameters using the common-base h parameter of Eq. (17) is converted into the expression of T-parameters using the common-base h parameter of Eq. (34). Equation (17) is reprinted.

$$\begin{pmatrix} r_e = h_{11B} - \dfrac{h_{12B}(1+h_{21B})}{h_{22B}} & r_b = \dfrac{h_{12B}}{h_{22B}} \\ \alpha = -\dfrac{h_{12B}+h_{21B}}{1-h_{12B}} & r_c = \dfrac{1-h_{12B}}{h_{22B}} \end{pmatrix} \qquad (17)$$

The conversion of Eq. (41) is applied to Eq (17).

$$r_e = h_{11B} - \frac{h_{12B}(1+h_{21B})}{h_{22B}}$$

$$==\gg \quad r_b = h_{11E} - \frac{h_{12E}(1+h_{21E})}{h_{22E}} \qquad \cdots(46)$$

$$r_b = \frac{h_{12B}}{h_{22B}}$$

$$==\gg\ r_e = \frac{h_{12E}}{h_{22E}} \qquad \cdots (47)$$

$$\alpha = -\frac{h_{12B} + h_{21E}}{1 - h_{12E}}$$

$$==\gg\ -\beta = -\frac{h_{12E} + h_{21E}}{1 - h_{12E}}$$

From the relation of $\alpha = \beta/(1+\beta)$,

$$\alpha = \frac{\frac{h_{12E} + h_{21E}}{1 - h_{12E}}}{1 + \frac{h_{12E} + h_{21E}}{1 - h_{12E}}} = \frac{h_{12E} + h_{21E}}{1 - h_{12E} + h_{12E} + h_{21E}} = \frac{h_{12E} + h_{21E}}{1 + h_{21E}} \qquad \cdots (48)$$

From Eq. (48),

$$1 - \alpha = 1 - \frac{h_{12E} + h_{21E}}{1 + h_{21E}} = \frac{1 - h_{12E}}{1 + h_{21E}} \qquad \cdots (49)$$

$$r_c = \frac{1 - h_{12B}}{h_{22B}}$$

$$==\gg\ (1 - \alpha) r_c = \frac{1 - h_{12E}}{h_{22E}} \qquad \cdots (50)$$

From Eqs (49) and (48),

$$==\gg\ r_c = \frac{1 - h_{12E}}{(1 - \alpha)\ h_{22E}} = \frac{1 - h_{12E}}{h_{22E}} \frac{1 + h_{21E}}{1 - h_{12E}} = \frac{1 + h_{21E}}{h_{22E}} \qquad \cdots (51)$$

The expression of T-parameters ($r_e,\ r_c,\ r_b,\ and\ \alpha$) using the common-emitter h parameters of Eqs. (46), (47), (48), and (51) is the same as Eq. (40).

$$\begin{pmatrix} r_e = \dfrac{h_{12E}}{h_{22E}} & r_b = h_{11E} - \dfrac{h_{12E}(1 + h_{21E})}{h_{22E}} \\ \alpha = \dfrac{h_{12E} + h_{21E}}{1 + h_{21E}} & r_c = \dfrac{1 + h_{21E}}{h_{22E}} \end{pmatrix} \qquad (40)$$

(7) Example of calculation

The measured values of h-parameters of the common-base transistor is shown in Eq. (52)

$$\begin{pmatrix} h_{11B} & h_{12B} \\ h_{21B} & h_{22B} \end{pmatrix} = \begin{pmatrix} 25\ [\Omega] & 2.0\times10^{-4} \\ -0.98 & 0.4[\mu S] \end{pmatrix} \quad \cdots (52)$$

These values are inserted into Eq.(17)

$$\begin{pmatrix} r_e = h_{11B} - \dfrac{h_{12B}(1+h_{21B})}{h_{22B}} & r_b = \dfrac{h_{12B}}{h_{22B}} \\ \alpha = -\dfrac{h_{12B}+h_{21B}}{1-h_{12B}} & r_c = \dfrac{1-h_{12B}}{h_{22B}} \end{pmatrix} \quad (17)$$

$$r_e = h_{11B} - \frac{h_{12B}(1+h_{21B})}{h_{22B}} = 25 - \frac{2.0\times10^{-4}(1-0.98)}{0.4\times10^{-6}} = 25 - 10 = 15\ [\Omega]$$

$$r_b = \frac{h_{12B}}{h_{22B}} = \frac{2.0\times10^{-4}}{0.4\times10^{-6}} = 500\ [\Omega]$$

$$\alpha = -\frac{h_{12B}+h_{21B}}{1-h_{12B}} = -\frac{2.0\times10^{-4}-0.98}{1-2.0\times10^{-4}} = 0.98019 \approx 0.98$$

$$r_c = \frac{1-h_{12B}}{h_{22B}} \frac{1-2.0\times10^{-4}}{0.4\times10^{-6}} = 2.499\times10^{6} \approx 2.5\ [\mathrm{M}\Omega]$$

The values of above T-parameters are inserted into Eq. (34).

$$\begin{pmatrix} h_{11E} & h_{12E} \\ h_{21E} & h_{22E} \end{pmatrix} = \begin{pmatrix} r_b + \dfrac{r_e r_c}{(1-\alpha)r_c + r_e} \cdots (e) & \dfrac{r_e}{r_e + (1-\alpha)r_c} \cdots (f) \\ \dfrac{\alpha r_c - r_e}{(1-\alpha)r_c + r_e} \cdots (g) & \dfrac{1}{r_e + (1-\alpha)r_c} \cdots (h) \end{pmatrix} \cdots (34)$$

$$h_{11E} = r_b + \frac{r_e r_c}{(1-\alpha)r_c + r_e} = 500 + \frac{15\ \times 2.499\times10^{6}}{(1-0.98019)\times 2.499\times10^{6} + 15}$$
$$= 500 + \frac{37.485\times10^{6}}{4.950\times10^{4}} = 500 + 757.193 = 1257.193 \approx 1.3\ [\mathrm{k}\Omega]$$

$$h_{12E} = \frac{r_e}{r_e + (1-\alpha)r_c} = \frac{15}{4.950\times10^{4}} = 3.029\times10^{-4} \approx 3.0\times10^{-4}$$

$$h_{21E} = \frac{\alpha r_c - r_e}{(1-\alpha)r_c + r_e} = \frac{0.98019\times2.499\times10^{6} - 15}{4.950\times10^{4}}$$
$$= \frac{0.98019\times2.499\times10^{6} - 15}{4.950\times10^{4}} = \frac{2.4495\times10^{6}}{4.950\times10^{4}} = 49.464 \approx 49$$

$$h_{22E} = \frac{1}{r_e + (1-\alpha)r_c} = \frac{1}{4.950\times10^{4}} = 2.019\times10^{-5} \approx 2.0\times10^{-5}$$