平成26年度前期東京工業大学学部講義

電子デバイス

Electron Devices

資料（６）　Presentation

Kazuya Masu
Director, ICE Cube Center
Frontier Research Center
Precision and Intelligence Laboratory
Dept. Electronics and Applied Physics

益　一　哉
異種機能集積研究センター
フロンティア研究機構
精密工学研究所
大学院・物理電子システム創造専攻

Tel & Fax: 045-924-5022 Email: masu@ieee.org,
http://masu-www.pi.titech.ac.jp/~masu/index-j.html

Green ICE Tokyo Tech
Information Communication Energy
Semiconductor Solution Research

TOKYO TECH
Pursuing Excellence

Today's purpose

- Understanding what determine the frequency characteristics of bipolar transistor.

拡散容量のみを考慮した遮断周波数

handout
TOKYO TECH
Pursuing Excellence

- $j\omega C_D r_e i_E + i_E = i_B + \alpha i_E$ （i_Eは、r_Eに流れる電流）
- 整理して、$(1-\alpha+j\omega C_D r_e) i_E = i_B$
- $\left|\frac{\alpha i_E}{i_B}\right| = \left|\frac{\alpha}{1-\alpha+j\omega C_D r_e}\right|$
- $1-\alpha \gg j\omega C_D r_e$である低周波では利得は$\beta$。
- $1-\alpha \ll j\omega C_D r_e$では、
- $\left|\frac{i_C}{i_B}\right| = \left|\frac{\alpha i_E}{i_B}\right| = \frac{1}{\omega C_D r_e}$
- 遮断周波数 $|i_C/i_B| \equiv 1$

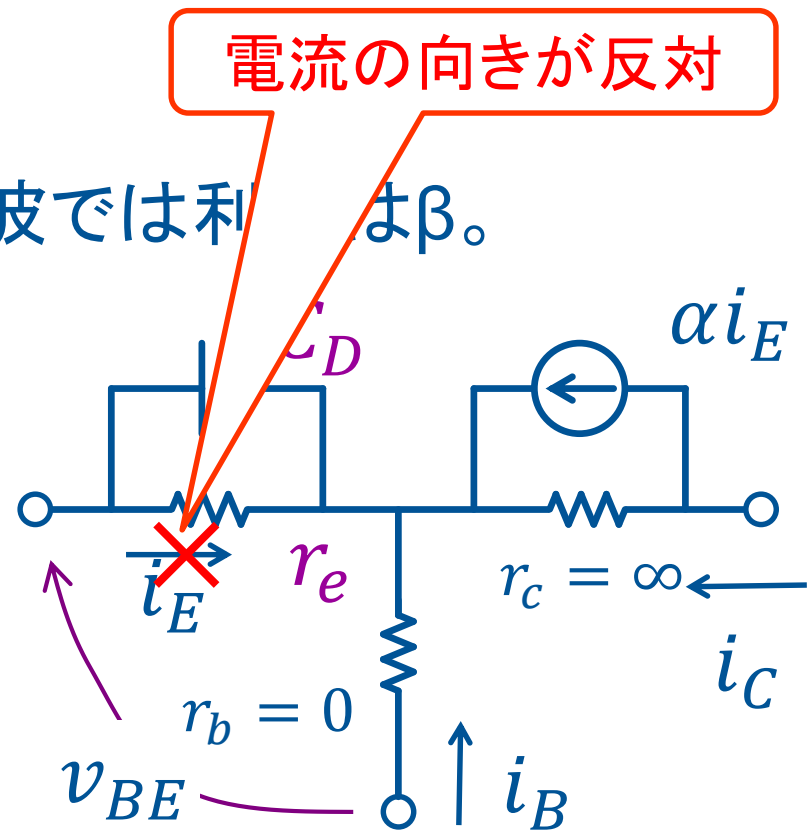

See next page. The next page is the revised version.

拡散容量のみを考慮した遮断周波数

handout
TOKYO TECH
Pursuing Excellence

- $j\omega C_D r_e i_E + i_E = i_B + \alpha i_E$ （ i_Eは、r_Eに流れる電流）
- 整理して、$(1-\alpha+j\omega C_D r_e)i_E = i_B$
- $\left|\frac{\alpha i_E}{i_B}\right| = \left|\frac{\alpha}{1-\alpha+j\omega C_D r_e}\right|$
- $1-\alpha \gg j\omega C_D r_e$である低周波では利得はβ。
- $1-\alpha \ll j\omega C_D r_e$では、
- $\left|\frac{i_C}{i_B}\right| = \left|\frac{\alpha i_E}{i_B}\right| = \frac{1}{\omega C_D r_e}$
- 遮断周波数 $|i_C/i_B| \equiv 1$

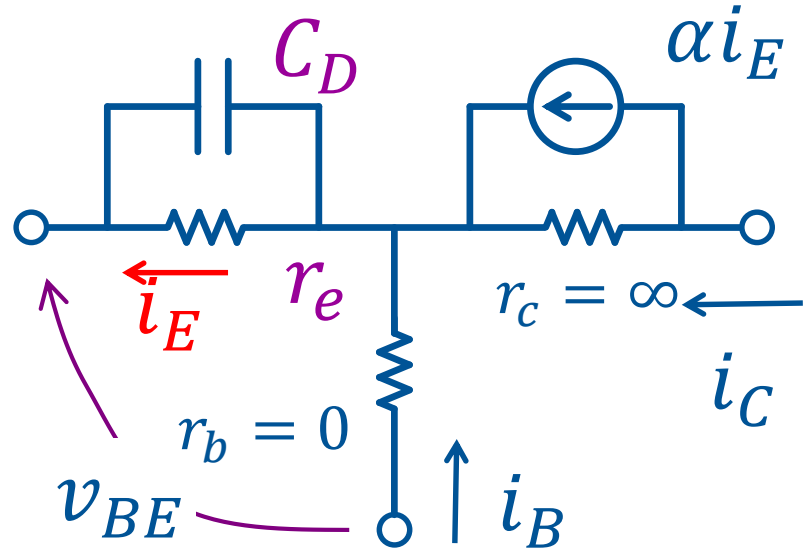

拡散容量のみを考慮した遮断周波数

- $j\omega C_D r_e i_E + i_E = i_B + \alpha i_E$ （ i_Eは、r_Eに流れる電流）
- 整理して、$(1-\alpha+j\omega C_D r_e)i_E = i_B$
- $\left|\frac{\alpha i_E}{i_B}\right| = \left|\frac{\alpha}{1-\alpha+j\omega C_D r_e}\right|$
- $1-\alpha \gg j\omega C_D r_e$である低周波では利得はβ。
- $1-\alpha \ll j\omega C_D r_e$では、
- $\left|\frac{i_C}{i_B}\right| = \left|\frac{\alpha i_E}{i_B}\right| = \frac{1}{\omega C_D r_e}$
- 遮断周波数 $|i_C/i_B| \equiv 1$
- $f_t = \frac{\omega}{2\pi} = \frac{1}{2\pi C_D r_e}$

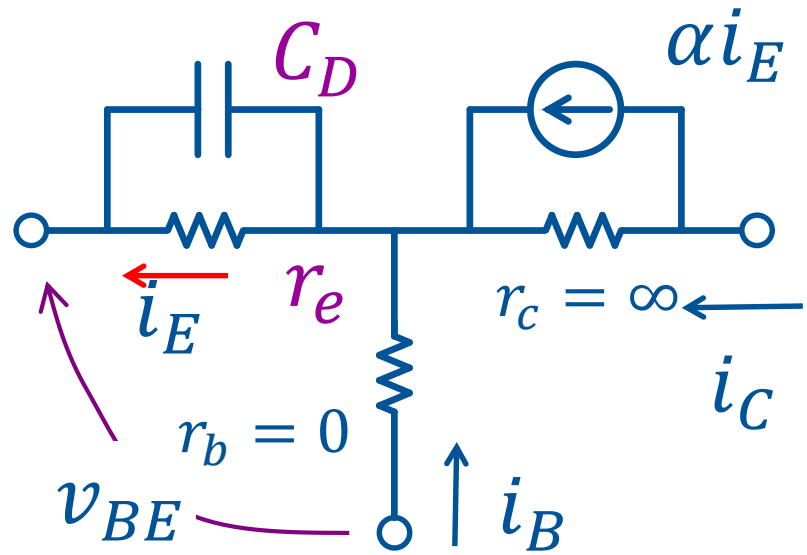

Cut-off frequency; diffusion cap is only taken into account.

presentation
TOKYO TECH
Pursuing Excellence

- $j\omega C_D r_e i_E + i_E = i_B + \alpha i_E$ (i_E: current flows thru r_E.)
- Simplify to $(1 - \alpha + j\omega C_D r_e) i_E = i_B$

Supplement English version

- $\left|\frac{\alpha i_E}{i_B}\right| = \left|\frac{\alpha}{1-\alpha+j\omega C_D r_e}\right|$
- At low freq. of $1 - \alpha \gg j\omega C_D r_e$, gain becomes β.
- For $1 - \alpha \ll j\omega C_D r_e$
- $\left|\frac{i_C}{i_B}\right| = \left|\frac{\alpha i_E}{i_B}\right| = \frac{1}{\omega C_D r_e}$
- Cut off freq. is defined as $|i_C / i_B| \equiv 1$
- $f_t = \frac{\omega}{2\pi} = \frac{1}{2\pi C_D r_e}$

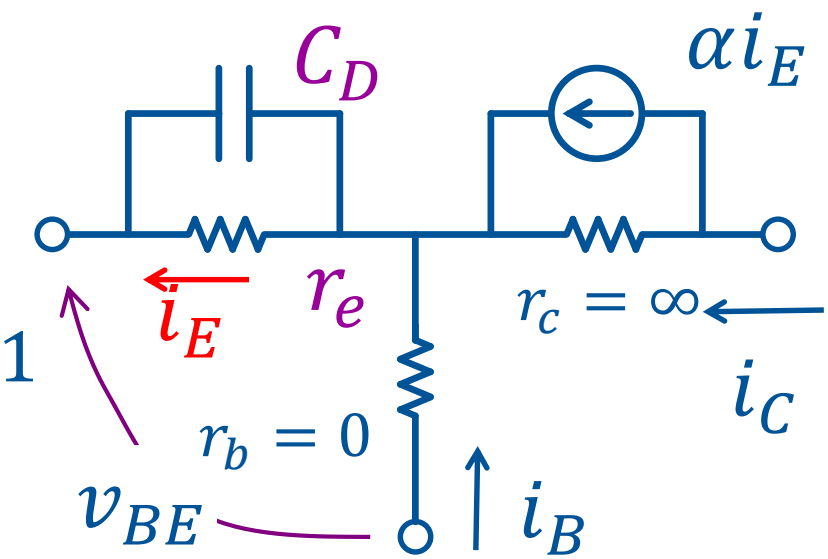

拡散容量のみを考慮した遮断周波数

- 遮断周波数: f_t　$|i_C/i_B| \equiv 1$　となる周波数
- $f_t = \dfrac{\omega}{2\pi} = \dfrac{1}{2\pi C_D r_e}$
- $J_E \approx J_C = q\dfrac{D_B}{W_B} n_{B0} e^{\frac{qV_{BE}}{kT}} \rightarrow r_E = \dfrac{\partial V_{BE}}{\partial J_E} \approx \dfrac{kT}{q}\dfrac{1}{J_C}$
- $C_D = \left|\dfrac{q}{kT} J_C \dfrac{{W_B}^2}{2D_B}\right|$　であるから、$C_D r_e = \dfrac{{W_B}^2}{2D_B}$
- $C_D r_e$: 電流に依存しない量

電子の速度（ベース走行時間 τ_B）

handout
TOKYO TECH
Pursuing Excellence

- $J_C = q\frac{-D_B \cdot n_B(0)}{W_B}$, $n_B(x) = n_B(0)e^{\frac{qV_{BE}}{kT}}\left(1 - \frac{x}{W_B}\right)$ より、
- $v(x) = \frac{J_C}{qn_B(x)} = \frac{D_B}{W_B - x}$
- ベース走行時間：微小領域の走行時間の逆数の積分
- $\tau_B = \int_0^{W_B} \frac{dx}{v(x)} = \frac{{W_B}^2}{2D_B}$
- $J_C = {}^{Q_B}/_{\tau_B}$ とも表記可能。

電子の速度（ベース走行時間 τ_B）

- $J_C = q\frac{-D_B \cdot n_B(0)}{W_B}$, $n_B(x) = n_B(0)e^{\frac{qV_{BE}}{kT}}\left(1-\frac{x}{W_B}\right)$ より、
- $v(x) = \frac{J_C}{qn_B(x)} = \frac{D_B}{W_B - x}$
- ベース走行時間：微小領域の走行時間の逆数の積分
- $\tau_B = \int_0^{W_B}\frac{dx}{v(x)} = \frac{{W_B}^2}{2D_B}$
- $J_C = {}^{Q_B}/_{\tau_B}$ とも表記可能。

$$C_D r_e = \frac{{W_B}^2}{2D_B}$$

α遮断周波数 （定性的な説明）

- ~~従属電流源に流れる伝リュ~~ 削 除
- 従属電流源に流れる電流が、エミッタ端子に流れる電流の $\frac{(1/j\omega C_D)}{r_e+(1/j\omega C_D)}$ と考えると、

次ページに修正版を示す

- 周波数成分を含んだαが
- $\frac{(1/j\omega C_D)}{r_e+(1/j\omega C_D)} = \frac{1}{1+j\omega C_D r_e}$
- $\alpha = \frac{\alpha_o}{1+j\frac{\omega}{\omega_\alpha}}, \omega = 1/C_D r_e$
- になると想像できる。

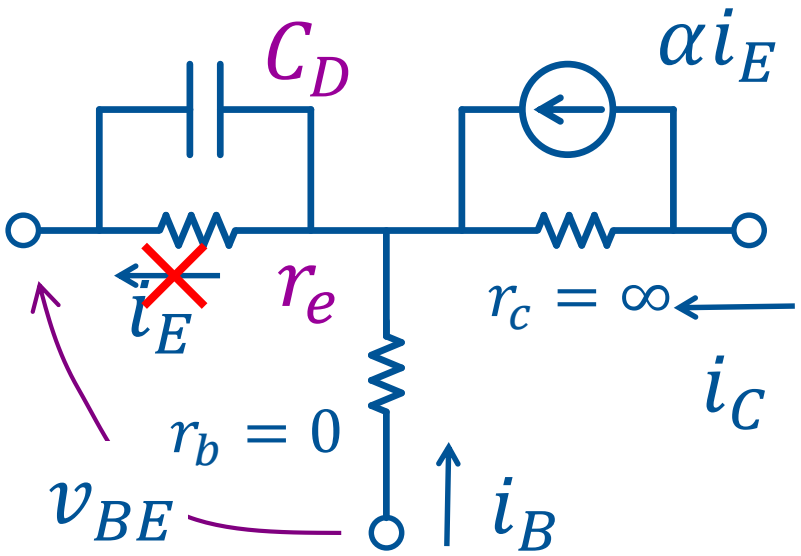

α cut-off frequency: simple derivation

TOKYO TECH
Pursuing Excellence

***Supplement*:** This simple derivation cannot be in the usual text book

- From the DC small signal equivalent circuit, the dependent current source is represented by αi_{ER}, where i_{ER} is the current thru r_e.
- When the diffusion capacitance C_D exists, the current thru the emitter terminal is

$$i_{ET} = (1 + j\omega C_D r_e)\, i_{ER}$$

$$\alpha i_{ER} = \alpha \frac{i_{ET}}{(1 + j\omega C_D r_e)} = \tilde{\alpha} i_{ET}$$

Hence, $\tilde{\alpha} = \alpha \Big/ \left(1 + j\left(\frac{\omega}{\omega_\alpha}\right)\right)$,

where $\omega_\alpha = 1/C_D r_e$

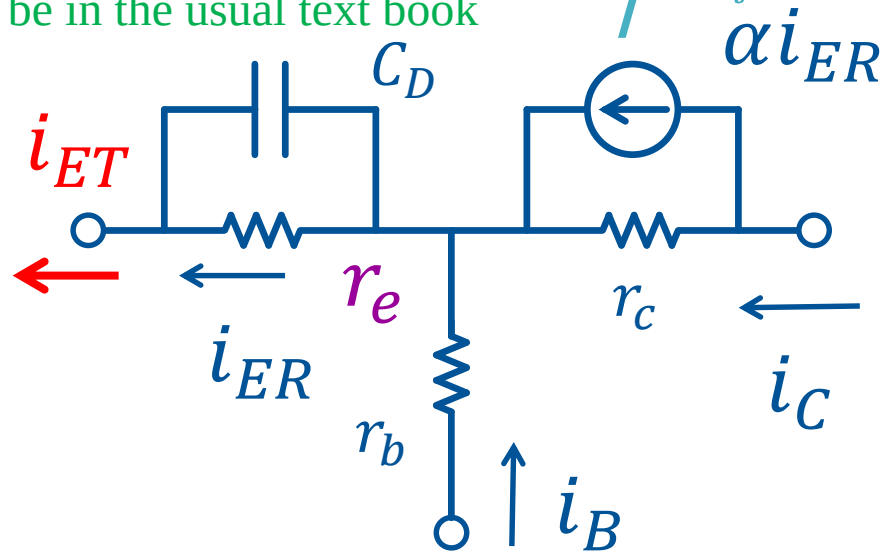

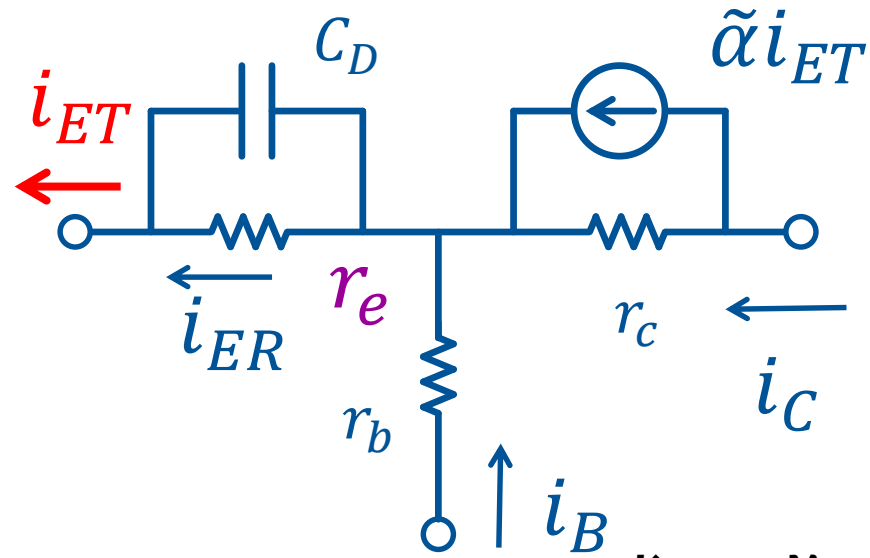

Kazuya Masu

α遮断周波数（求め方）

1. 高周波の微小信号成分を考える。
2. $i(0)$に対して$i(W)$には時間遅れがあるはず。
3. α_Tが周波数特性を持つ。（仮定：α_E、α_Cは周波数特性を持たない。）
4. 中性ベース内の連続の方程式を交流成分について解くことにより、求める。

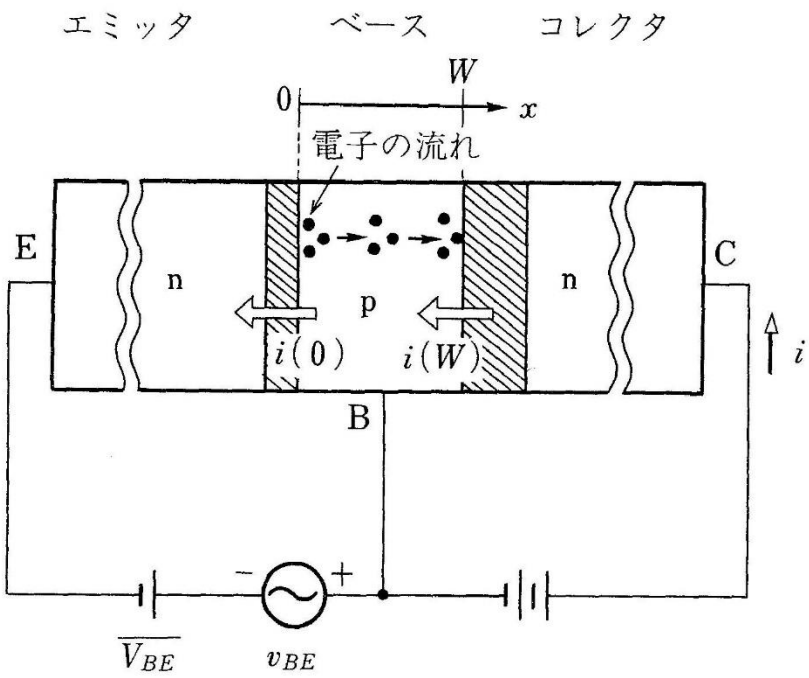

$$\frac{\tilde{\alpha}}{\alpha_O} = \frac{1}{1 + j\dfrac{\omega}{\omega_\alpha}} = \frac{1}{1 + j\dfrac{f}{f_\alpha}}$$

$$\omega_\alpha = \frac{2D_{eB}}{W^2}$$

α遮断周波数とβ遮断周波数

handout
TOKYO TECH
Pursuing Excellence

$$\frac{\tilde{\alpha}}{\alpha_O} = \frac{1}{1 + j\dfrac{\omega}{\omega_\alpha}} = \frac{1}{1 + j\dfrac{f}{f_\alpha}}$$

ここで、

f_β:β遮断周波数

$$\tilde{\beta} = \frac{\tilde{\alpha}}{1-\tilde{\alpha}} = \frac{\dfrac{\alpha_O}{1 + j\left(f/f_\alpha\right)}}{1 - \dfrac{\alpha_O}{1 + j\left(f/f_\alpha\right)}}$$

また、

$$= \frac{\dfrac{\alpha_O}{1-\alpha_O}}{1 + j\dfrac{f}{f_\alpha(1-\alpha_O)}}$$

$$= \frac{\beta_O}{1 + j\left(f/f_\beta\right)}$$

$$\alpha_O f_\alpha = \beta_O f_\beta$$

利得帯域幅積が一定

内容は同じですが、修正版を作成

α遮断周波数とβ遮断周波数

handout
TOKYO TECH
Pursuing Excellence

$$\frac{\tilde{\alpha}}{\alpha_o} = \frac{1}{1 + j\dfrac{\omega}{\omega_\alpha}} = \frac{1}{1 + j\dfrac{f}{f_\alpha}}$$

ここで、

f_β : β遮断周波数

$$\tilde{\beta} = \frac{\tilde{\alpha}}{1-\tilde{\alpha}} = \frac{\dfrac{\alpha_o}{1+j\frac{f}{f_\alpha}}}{1-\dfrac{\alpha_o}{1+j\frac{f}{f_\alpha}}}$$

$$= \frac{\alpha_o}{1+j\frac{f}{f_\alpha}-\alpha_o} = \frac{\dfrac{1}{1-\alpha_o}\alpha_o}{1+j\dfrac{f}{(1-\alpha_o)f_\alpha}}$$

$$= \frac{\beta_o}{1 + j\dfrac{f}{f_\beta}}$$

また、

$$f_\alpha \alpha_o = f_\beta \beta_o$$

利得帯域幅積が一定

α遮断周波数とβ遮断周波数

$$\frac{\tilde{\alpha}}{\alpha_o} = \frac{1}{1 + j\dfrac{\omega}{\omega_\alpha}} = \frac{1}{1 + j\dfrac{f}{f_\alpha}}$$

$$\tilde{\beta} = \frac{\tilde{\alpha}}{1-\tilde{\alpha}} = \frac{\dfrac{\alpha_o}{1+j\frac{f}{f_\alpha}}}{1-\dfrac{\alpha_o}{1+j\frac{f}{f_\alpha}}}$$

$$= \frac{\alpha_o}{1+j\frac{f}{f_\alpha}-\alpha_o} = \frac{\frac{1}{1-\alpha_o}\alpha_o}{1+j\frac{f}{(1-\alpha_o)f_\alpha}}$$

$$= \frac{\beta_o}{1 + j\dfrac{f}{f_\beta}}$$

ここで、

$$f_\beta = f_\alpha(1 - \alpha_o)$$

f_β : β遮断周波数

また、

$$\frac{f_\alpha}{f_\beta} = \frac{1}{(1 - \alpha_o)} = \frac{\beta_o}{\alpha_o}$$

$$f_\alpha \alpha_o = f_\beta \beta_o$$

利得帯域幅積が一定

handout

TOKYO TECH Pursuing Excellence

α cut-off and β cut-off frequencies

$20 \log|\alpha|$, $20 \log|\beta|$

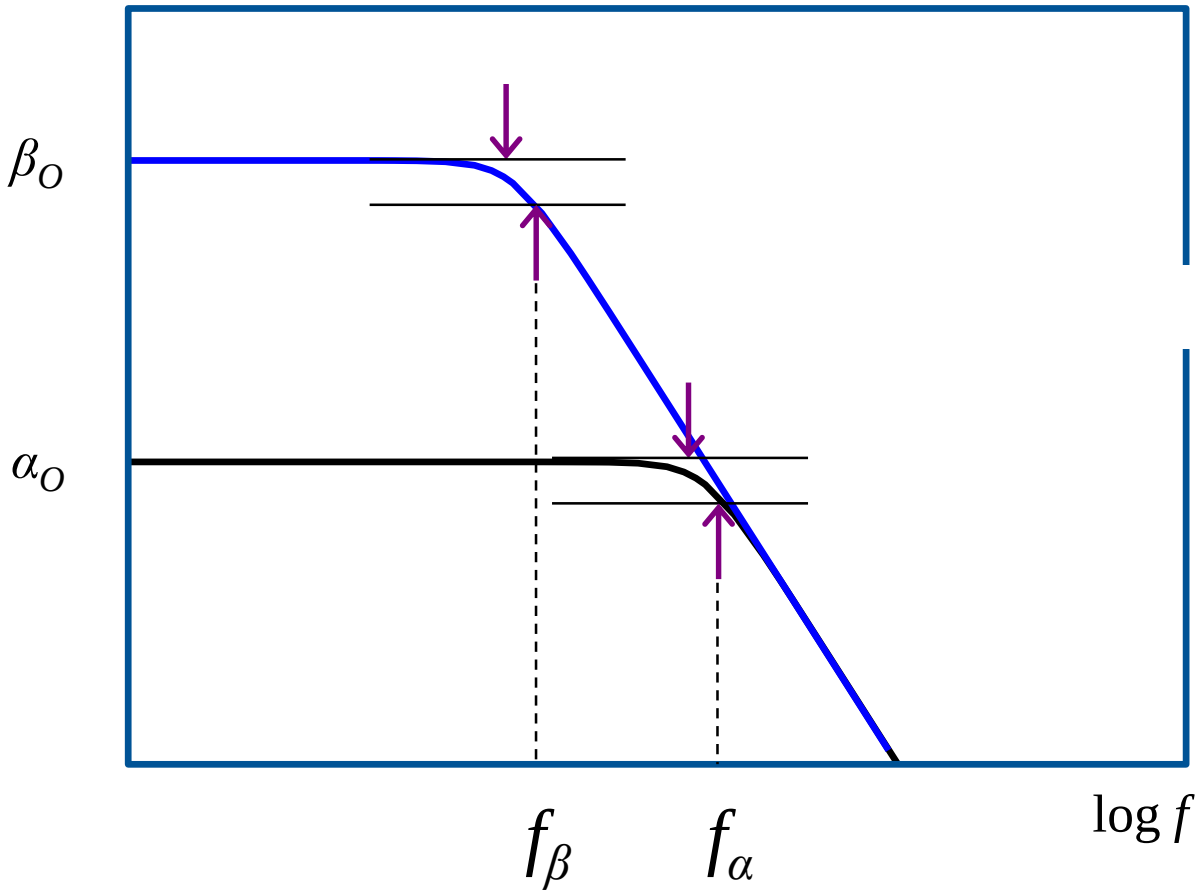

α cut-off and β cut-off frequencies

$20 \log|\alpha|$, $20 \log|\beta|$

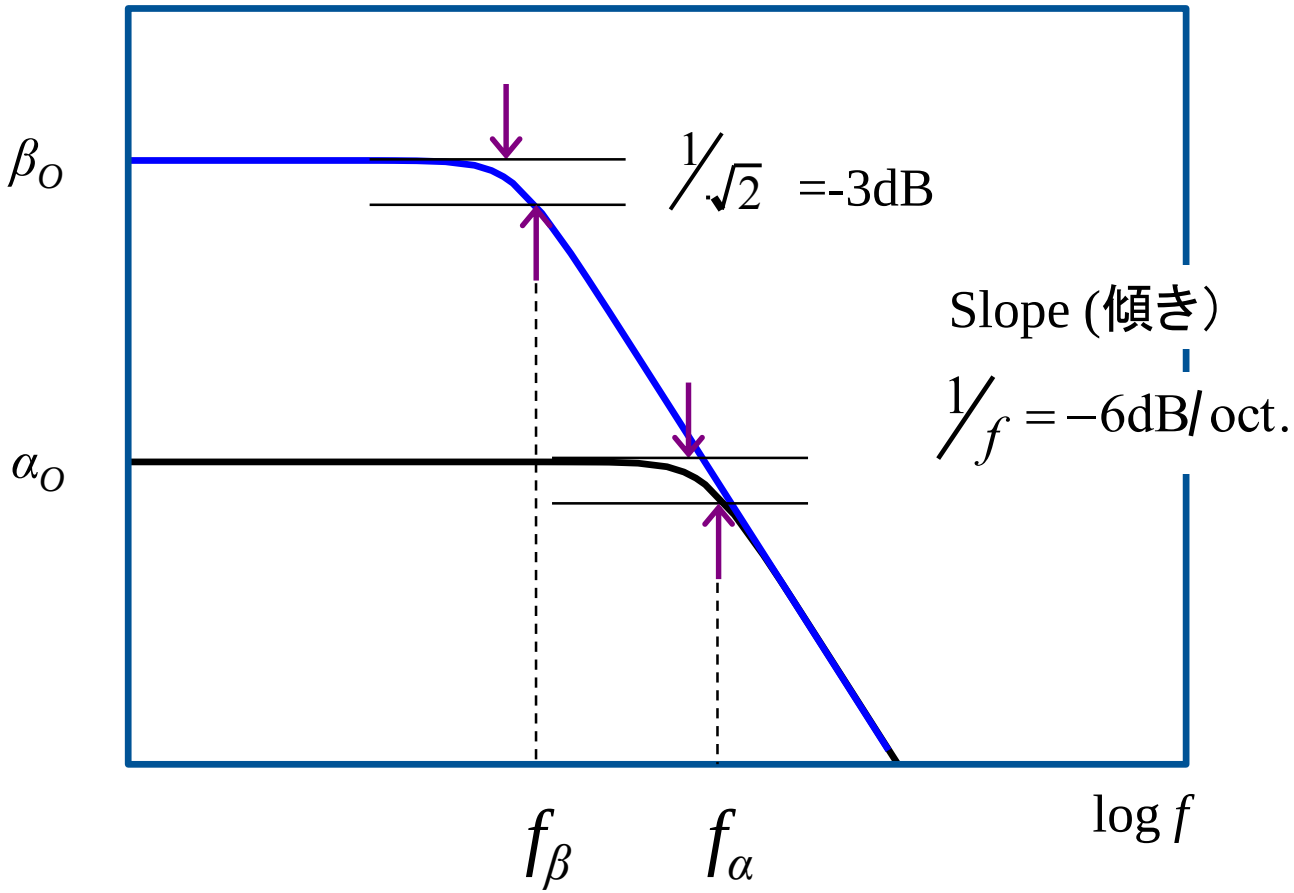

f_T, α and β cut-off, frequencies

20 log|α|, 20 log|β|

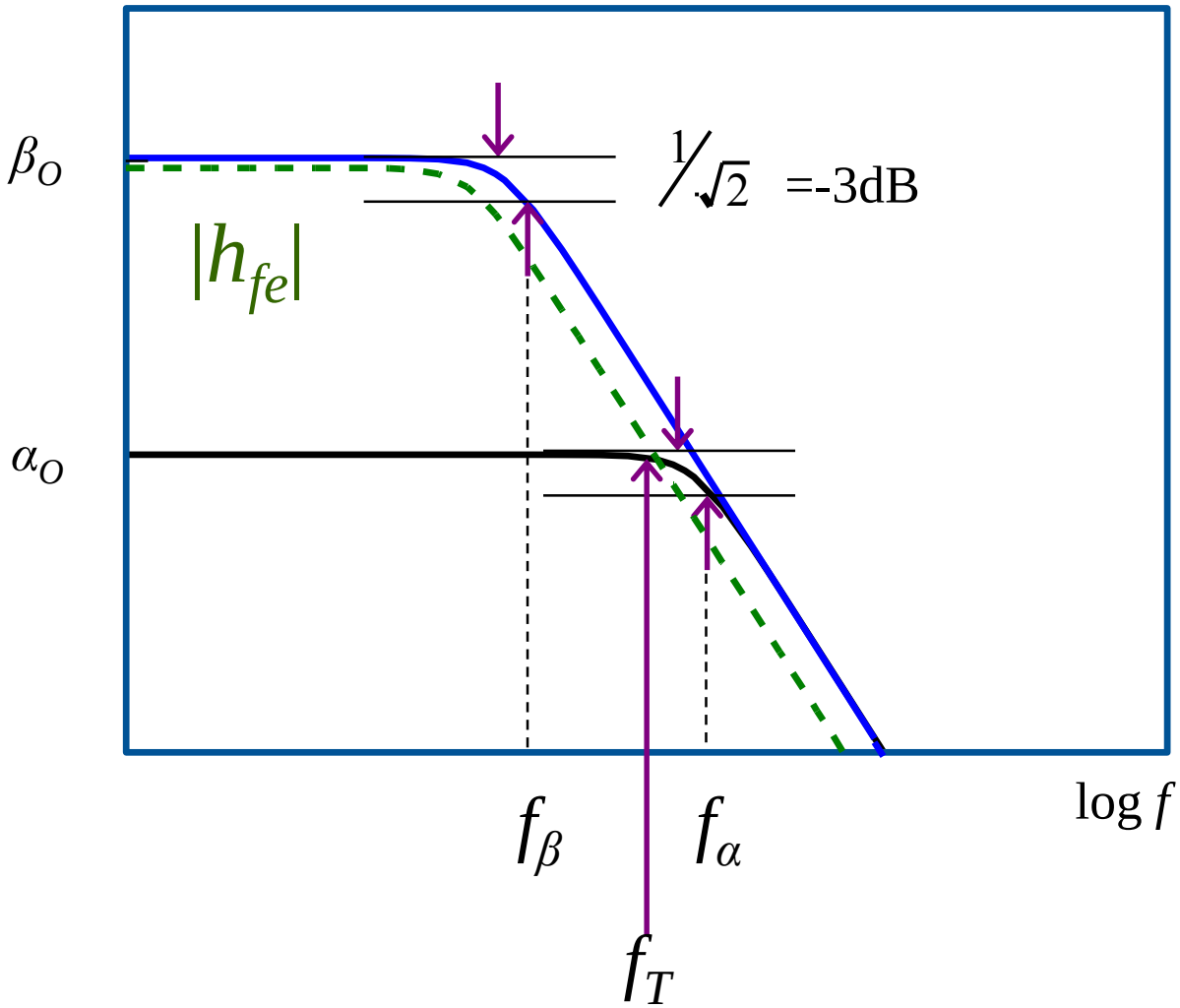

f_T, α and β cut-off, frequencies

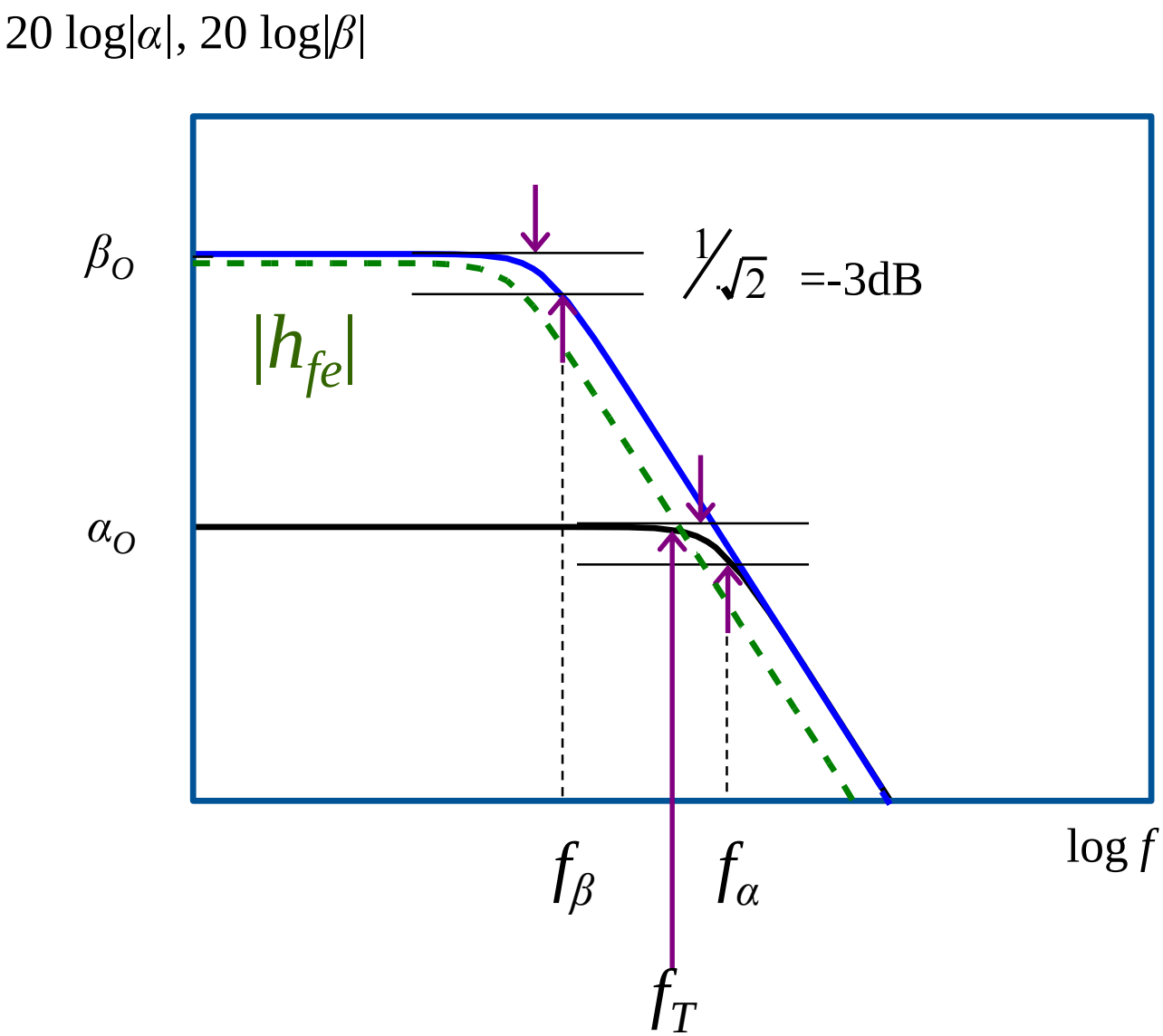

$$|h_{fe}| \approx |\beta|$$

$f=f_T$において、

$$|h_{fe}|=1$$

$$|h_{21e}|=1$$

handout

TOKYO TECH Pursuing Excellence

Hybrid π equivalent circuit

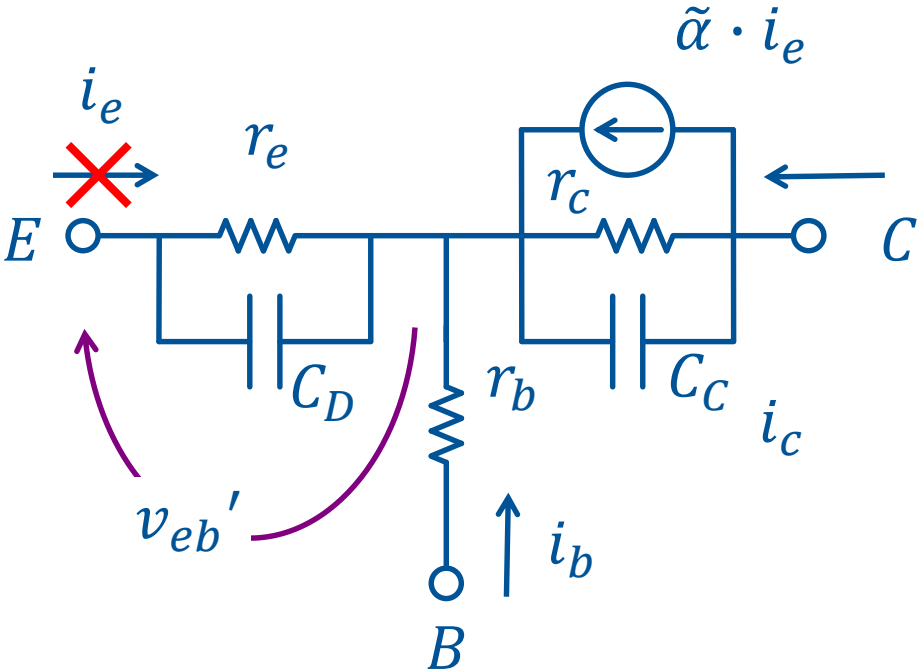

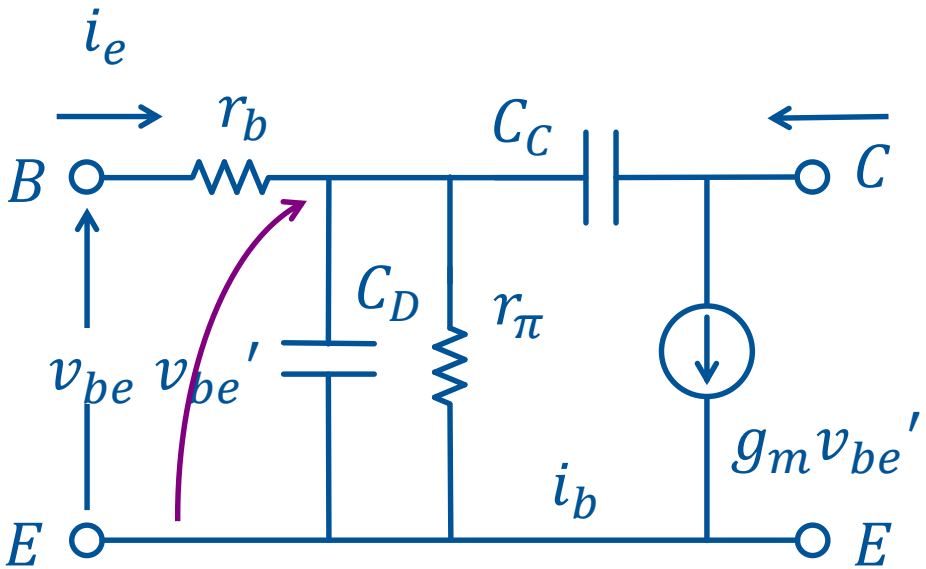

- ~~ベース接地T形等価回路~~
- Common-emitter hybrid π

$$r_\pi = \frac{r_e}{1-\alpha_o} \qquad g_m = \frac{\alpha_o}{r_e}$$

handout

TOKYO TECH Pursuing Excellence

Hybrid π equivalent circuit

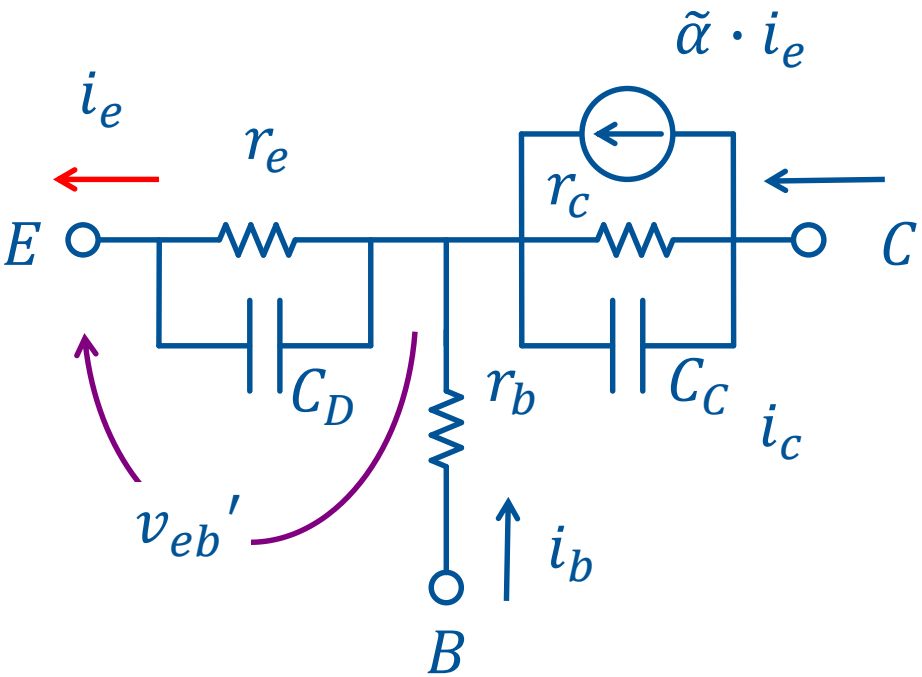

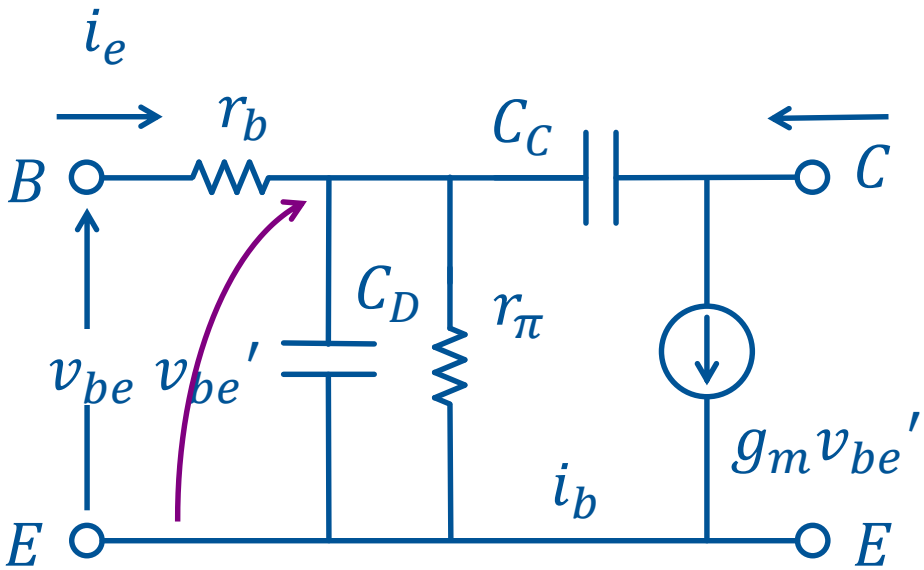

- Common-base T-type equivalent circuit

- Common-emitter hybrid π

$$r_\pi = \frac{r_e}{1-\alpha_o} \qquad g_m = \frac{\alpha_o}{r_e}$$

$$v_{be}' = -v_{eb}'$$

- Hybrid π equivalent circuit is used for circuit analysis.（ハイブリットπ型回路は回路解析に利用される）
- The derivation of hybrid π circuit is described in the supplement.（導出は補足を参照のこと）

ハイブリットπ形等価回路

- エミッタ接地ハイブリッドπ形等価回路から最大発振周波数を求めることができる。

内容は同じですが、和英併記版を作成。

$$f_{max} = \sqrt{\frac{f_\alpha}{8\pi r_b C_\mu}}$$

The contents are the same. Next page is written in Japanese-English together.

- バイポーラトランジスタ（エミッタ接地）は、ベース電流が流れるので電流制御形デバイスと呼ばれる。しかし、最近のデバイスではβが2～300と大きく、r_bが小さいと考えることができるので、入力開放のMOSFET-likeの回路（g_m動作）で解析している。

f_{max} in hybrid π equivalent circuit (1)

- From the common-emitter hybrid π equivalent circuit, the maximum oscillation frequency f_{max} can be derived.（ハイブリッド π形等価回路から最大発振周波数 f_{max} を求めることができる。）

$$f_{max} = \sqrt{\frac{f_\alpha}{8\pi r_b C_C}}$$

- The maximum oscillation frequency f_{max} is defined as the frequency where the power gain under conjugate impedance matching condition become 1 (0dB).
- 最大発振周波数は、入出力のインピーダンスマッチングがとれた状態での電力増幅率が1（0dB）になる周波数で定義される。

f_{max} in hybrid π equivalent circuit (2)

- In the bipolar common-emitter circuit, the base current flows into the device, so that the bipolar transistor is called as current-controlled device. For recent bipolar device, β becomes over 2-300 and base resistance r_b is small. The bipolar transistor circuit can be analyzed by the similar way of MOSFET, i.e. g_m-operation, where the input terminal is treated as an open-terminal.
- バイポーラトランジスタ（エミッタ接地）は、ベース電流が流れるので電流制御形デバイスと呼ばれる。しかし、最近のデバイスではβが2～300と大きく、r_bが小さいと考えることができるので、入力開放のMOSFET-likeの回路（g_m動作）で解析している。

handout

TOKYO TECH
Pursuing Excellence

Summary

- Capacitance component affect the frequency characteristics.
- Important frequencies of bipolar transistor

Summary

- Capacitance component affect the frequency characteristics.
- Important frequencies of bipolar transistor
  - α cut-off frequency
  - β cut-off frequency
  - Cut-off frequency f_t
    - The frequency where current gain becomes one.
  - Maximum oscillation frequency
    - Maximum available power gain become one.

Supplement (A) What are h_{fe}, h_{21}? (1)

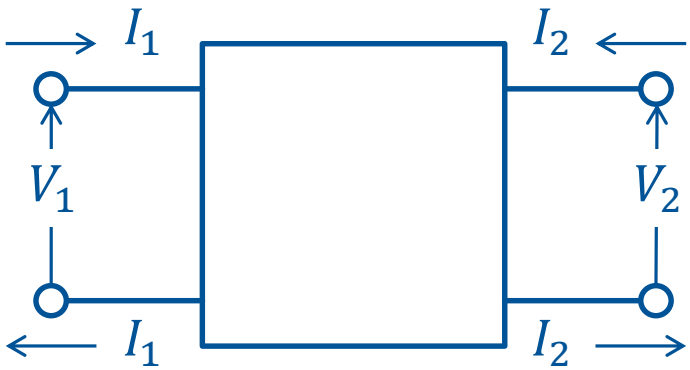

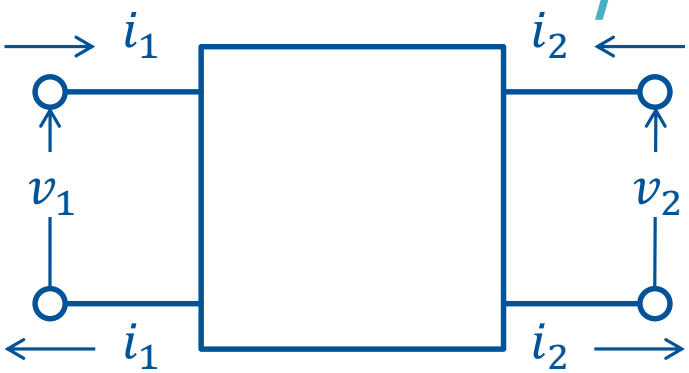

$$\begin{pmatrix} V_1 \\ I_2 \end{pmatrix} = \begin{pmatrix} H_{11} & H_{12} \\ H_{21} & H_{22} \end{pmatrix} \begin{pmatrix} I_1 \\ V_2 \end{pmatrix}$$

$$\begin{pmatrix} v_1 \\ i_2 \end{pmatrix} = \begin{pmatrix} h_{11} & h_{12} \\ h_{21} & h_{22} \end{pmatrix} \begin{pmatrix} i_1 \\ v_2 \end{pmatrix}$$

- When voltage V and current I represent DC signals, the large characters of H_{ij} are used.
- , voltage V and current I represent DC signals.

- When voltage v and current i represent AC or small signals, the small characters of h_{ij} are used.

Supplement (A) What are h_{fe}, h_{21}? (1)

- The small-character h-parameters of eq.(1) is often rewritten as eq.(2)

$$\begin{pmatrix} v_1 \\ i_2 \end{pmatrix} = \begin{pmatrix} h_{11} & h_{12} \\ h_{21} & h_{22} \end{pmatrix} \begin{pmatrix} i_1 \\ v_2 \end{pmatrix} \quad \cdots (1)$$

$$\begin{pmatrix} v_1 \\ i_2 \end{pmatrix} = \begin{pmatrix} h_i & h_r \\ h_f & h_o \end{pmatrix} \begin{pmatrix} i_1 \\ v_2 \end{pmatrix} \quad \cdots (2)$$

- In order to distinguish the ground types, suffixes are used.

$\begin{pmatrix} h_{ie} & h_{re} \\ h_{fe} & h_{oe} \end{pmatrix}$ for common-emitter h-parameters

$\begin{pmatrix} h_{ib} & h_{rb} \\ h_{fb} & h_{ob} \end{pmatrix}$ for common-baser h-parameters

Supplement (B) Derivation of Hybrid π equivalent circuit (1)

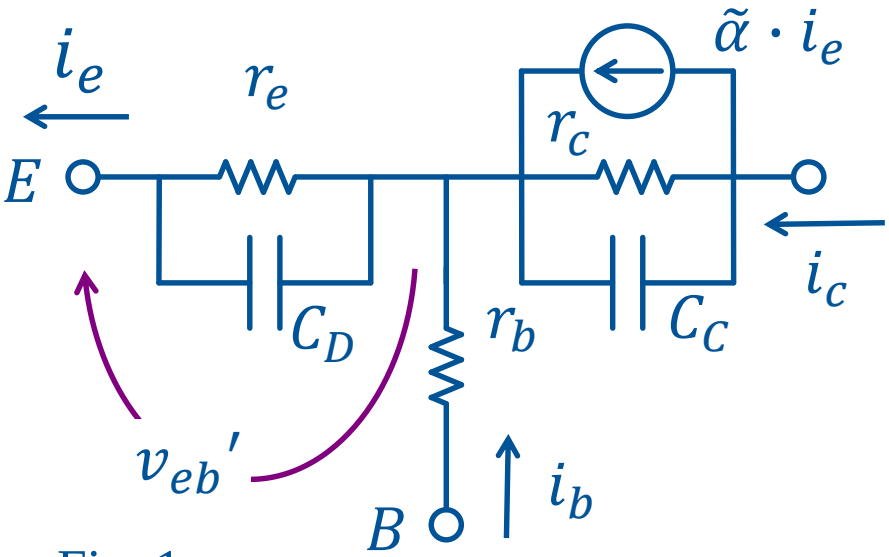

Fig. 1
Common-base T-type equivalent circuit

- First, the dependent current source $\tilde{\alpha} \cdot i_e$ in the common base equivalent circuit in Fig.1 is rewritten. i_e is the current flows from the emitter terminal, and $\tilde{\alpha} = \alpha_o/(1 + j\omega C_D r_e)$.

$$i_e = -\left({}^{1}/_{r_e} + j\omega C_D\right) v_{eb}'$$

- Then, $\tilde{\alpha} i_e = -(\alpha_o/r_e) v_{eb}'$, where $g_m \equiv \alpha_o/r_e$
- Exchanging E and B, Fig. 1 is rewritten into Fig. 2.
- Here, $v_{be}' = -v_{eb}'$

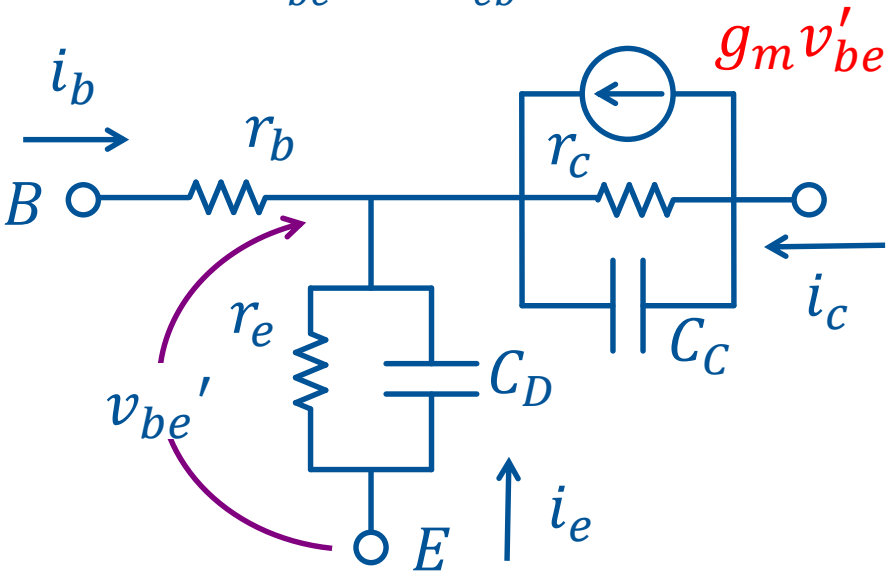

Fig. 2 Common-emitter equivalent circuit

Supplement (B) Derivation of Hybrid π equivalent circuit (2)

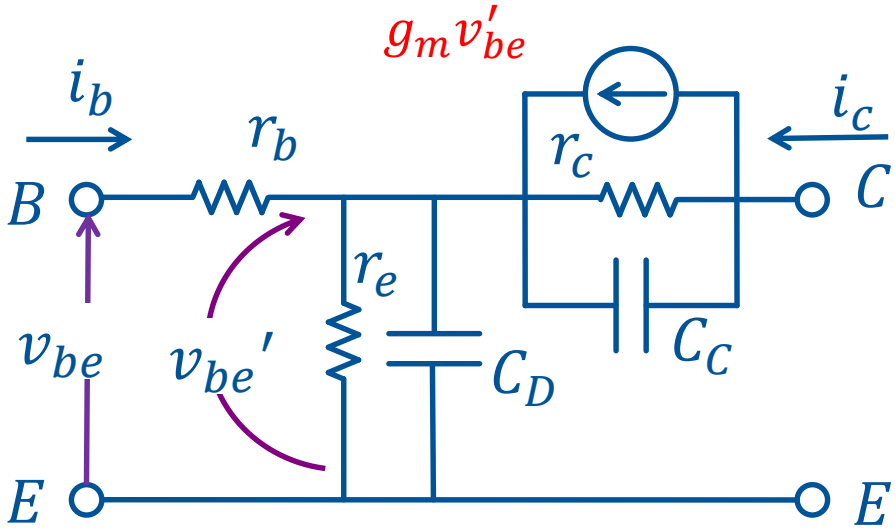

Fig. 3 Common-emitter equivalent circuit

- Fig.2 is re-drawn to Fig. 3
- r_c and $1/j\omega C_C$ are much larger than r_e and $1/j\omega C_D$.
- In this case, the dependent current source can be inserted between C and E as shown in Fig. 4.

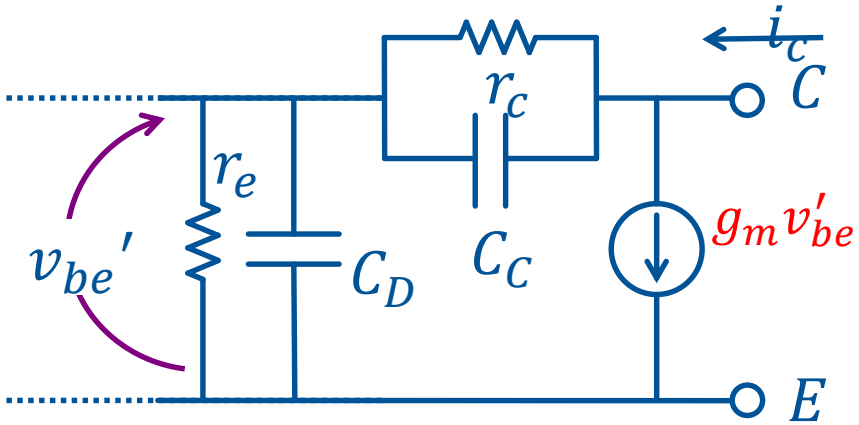

Fig. 4 The dependent current source can be inserted between C and E.

Supplement (B) Derivation of Hybrid π equivalent circuit (3)

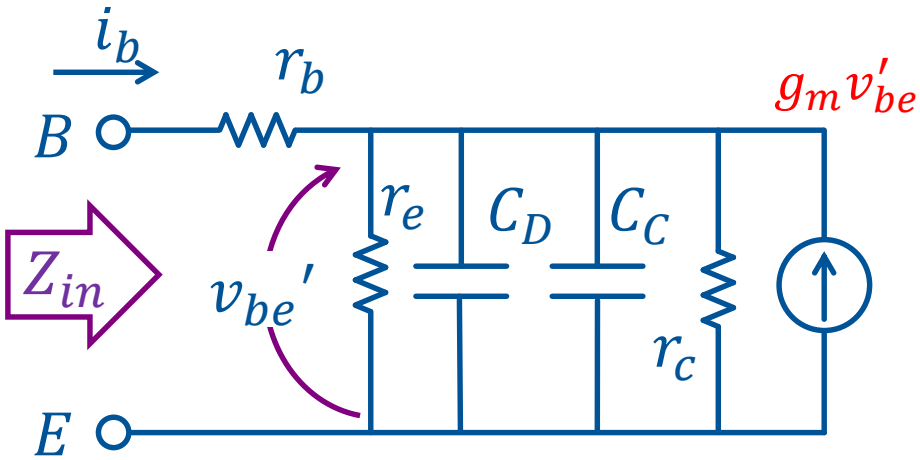

Fig. 5 Input impedance Z_{in}

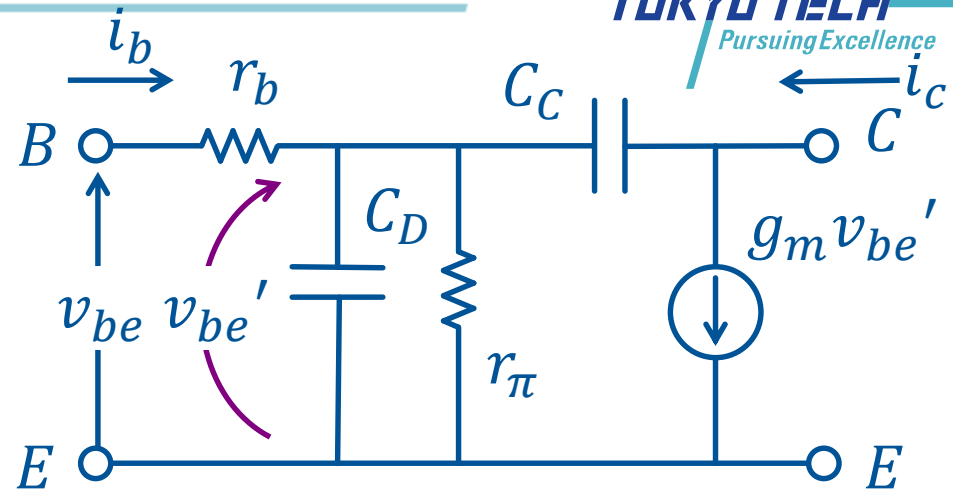

Fig. 7 hybrid π equivalent circuit.

$$g_m v'_{be} = \frac{\alpha_o}{r_e} v'_{be} \qquad r_\pi = \frac{r_e}{1-\alpha_o}$$

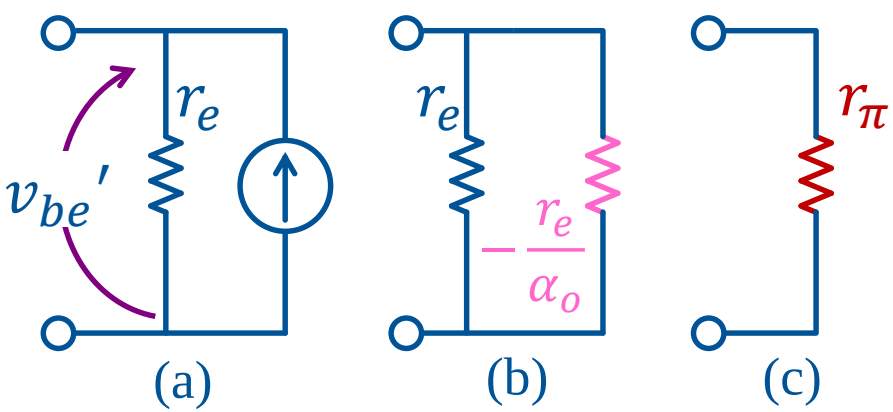

Fig. 6 Transformation of the current source.

- The Input impedance Z_{in} is defined as an impedance between B and C with shortening the output terminal C-B as shown in Fig. 5.
- The parallel of r_e and the dependent current source can be modified to Fig. 5(c).
- From the discussions of Figs. 4 and 6, the hybrid p circuit can be drawn as shown in Fig 7.