平成26年度前期東京工業大学学部講義

電子デバイス

Electron Devices

資料（４）　Handout

The handout on April 28 was revised as this file. Detail derivation is not necessary for beginning student. It is noted that The derivation is an good exercise of the second order linear differential equation. “5. Exact analysis” that is not included in the handout on April 28, is newly included. “5. Exact analysis” as supplement.

益　一　哉

異種機能集積研究センター

ソリューション研究機構

精密工学研究所

大学院・物理電子システム創造専攻

Tel & Fax: 045-924-5022 Email: masu@ieee.org,

http://masu-www.pi.titech.ac.jp/~masu/index-j.html

Green ICE Tokyo Tech Information Communication Energy

Semiconductor Solution Research

TOKYO TECH Pursuing Excellence

Today's purpose

agenda

TOKYO TECH Pursuing Excellence

1. Currents that flow thru the bipolar transistor (デバイスに流れる電流の関係)
2. Review: analysis of n^+p junction [n^+p接合の特性解析（復習）]
3. Approximate analysis: n^+pn^- bipolar transistor（近似解法）
4. To understand the common-base current gain
5. Exact analysis（厳密解）:Supplement

Bipolar Transistor

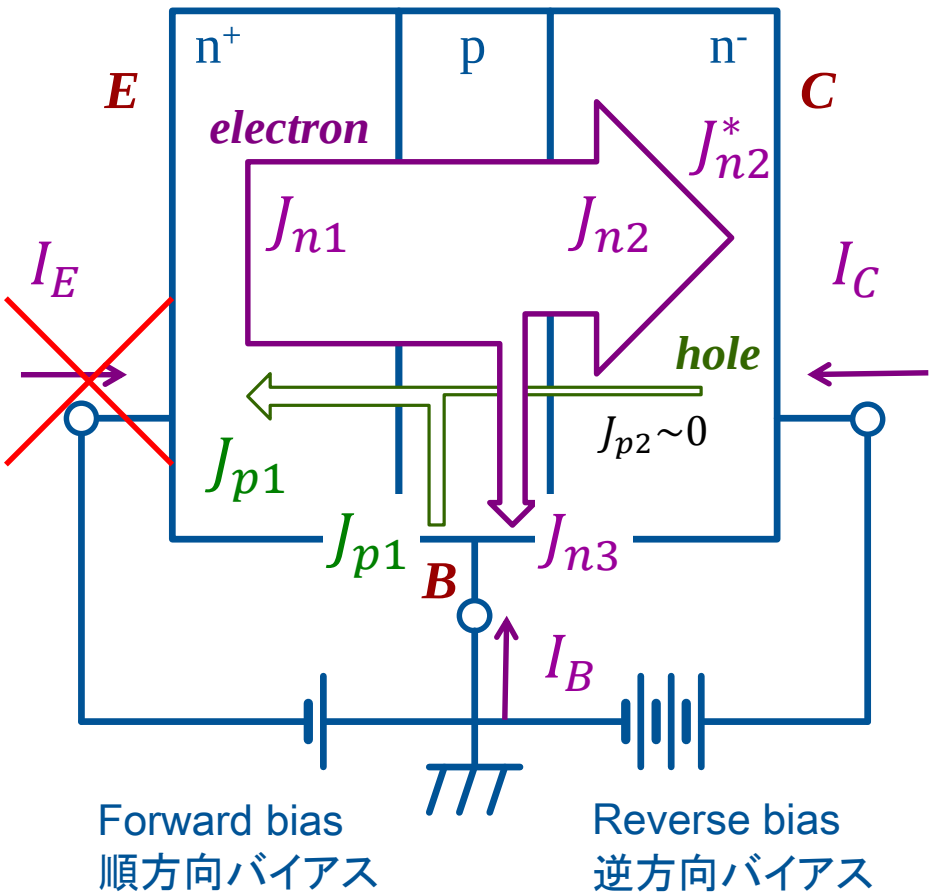

- Relation among currents

$$\cancel{-I_E} = J_{n1} + J_{p1}$$

$$I_B = J_{n3} + J_{p1}$$

$$I_C = J_{n2}^* = J_{n2}$$

- Common-base current gain
（ベース接地電流増幅率）

$$\alpha = \cancel{\frac{-I_E}{I_C}} \approx 0.99 < 1$$

This handout on April 28 is revised as in the next page.

Bipolar Transistor

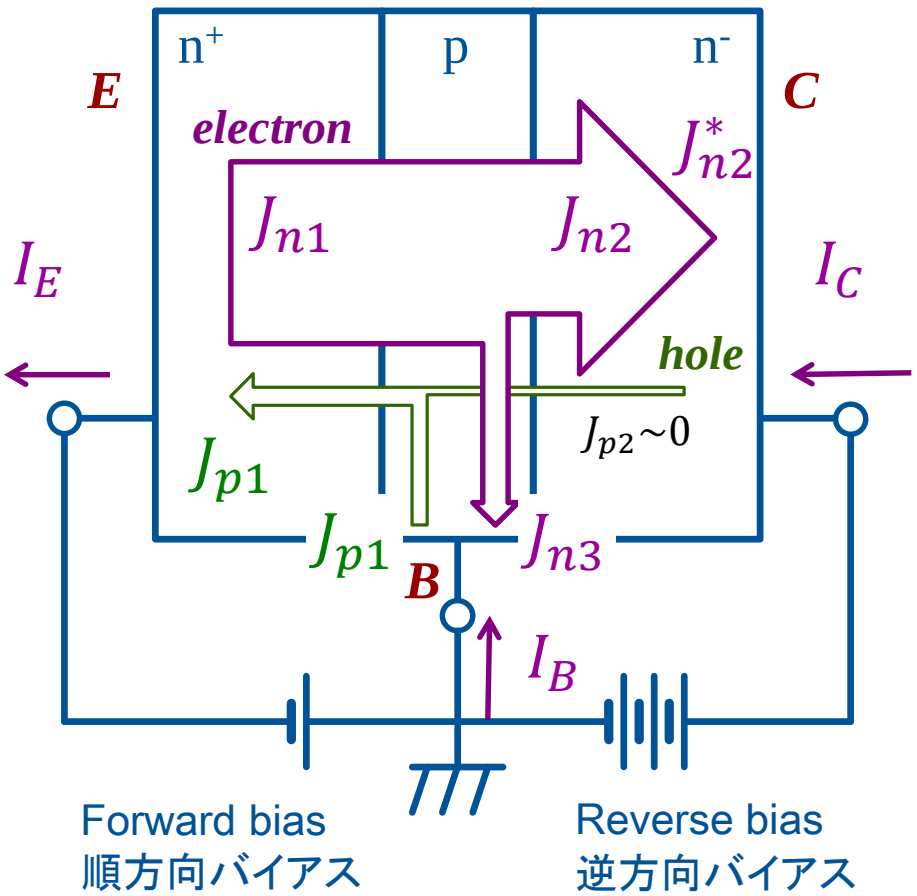

- Relation among currents

$$I_E = J_{n1} + J_{p1}$$

$$I_B = J_{n3} + J_{p1}$$

$$I_C = J_{n2}^* = J_{n2}$$

- Common-base current gain
（ベース接地電流増幅率）

$$\alpha = \frac{I_c}{I_E} \qquad \approx 0.99 < 1$$

Bipolar Transistor

- α_E :
- α_T :
- α_C :

agenda

TOKYO TECH Pursuing Excellence

1. Currents that flow thru the bipolar transistor (デバイスに流れる電流の関係)
2. Review: analysis of n^+p junction [n^+p接合の特性解析(復習)]
3. Approximate analysis: n^+pn^- bipolar transistor (近似解法)
4. To understand the common-base current gain
5. Exact analysis (厳密解):Supplement

Detail derivation is not necessary for beginning student. It is noted that The derivation is an good exercise of the second order linear differential equation. "5. Exact analysis is not included in the handout on April 28,

Review: Current of n⁺p junction (1)

handout

TOKYO TECH
Pursuing Excellence

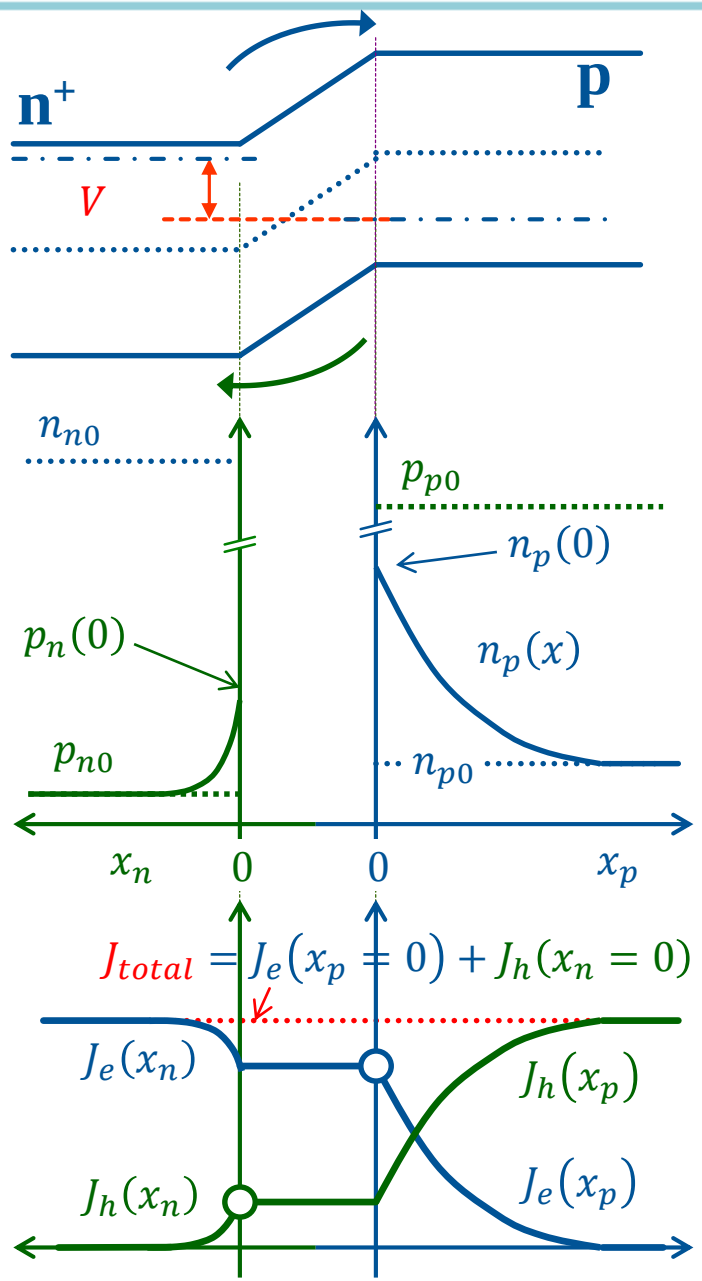

1. Carrier (=electron) continuous equation in p-region

$$\frac{d^2}{dx_p{}^2}\left(n_p(x_p) - n_{p0}\right) - \frac{n_p(x_p) - n_{p0}}{L_e{}^2} = 0$$

2. General solution

3. Boundary condition

$$n_p(x_p = 0) = n_{p0}\, exp\left(\frac{qV}{kT}\right)$$

$$n_p(x_p = \infty) = n_{p0}$$

Kazuya Masu

Review: Current of n⁺p junction (2)

TOKYO TECH
Pursuing Excellence

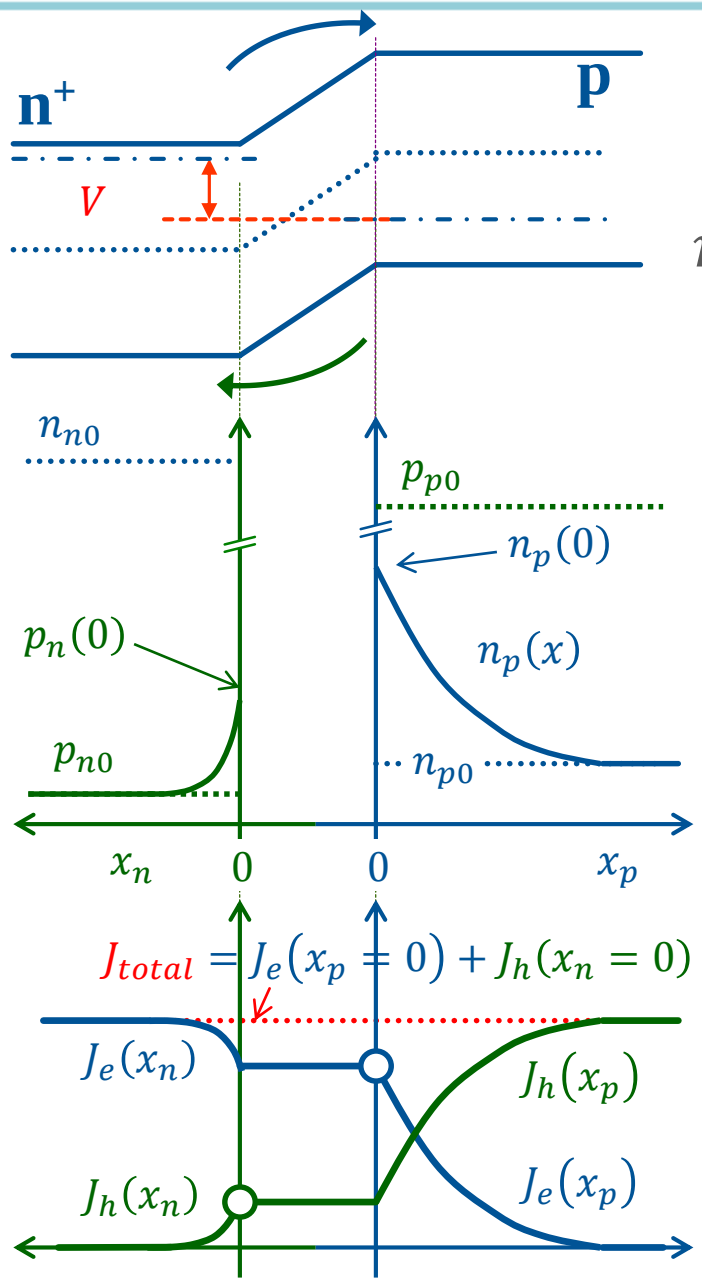

4. Electron concentration in p-region

$$n'_p(x_p) = n_{p0}\left\{exp\left(\frac{qV}{kT}\right) - 1\right\} exp\left(-\frac{x_p}{L_e}\right)$$

5. Electron current

$$J_e(x_p) = qD_e \frac{dn'_p(x_p)}{dx_p}$$

$$= -q\frac{n_{p0}D_e}{L_e}\left\{exp\left(\frac{qV}{kT}\right) - 1\right\} exp\left(-\frac{x_p}{L_e}\right)$$

6. Hole current in n-region can be derived by similar way

$$J_h(x_n) = -D_h \frac{dp'_n(x_n)}{dx_n}$$

$$= q\frac{p_{n0}D_h}{L_h}\left\{exp\left(\frac{qV}{kT}\right) - 1\right\} exp\left(-\frac{x_n}{L_h}\right)$$

Review: Current of n⁺p junction (3) *handout*

TOKYO TECH
Pursuing Excellence

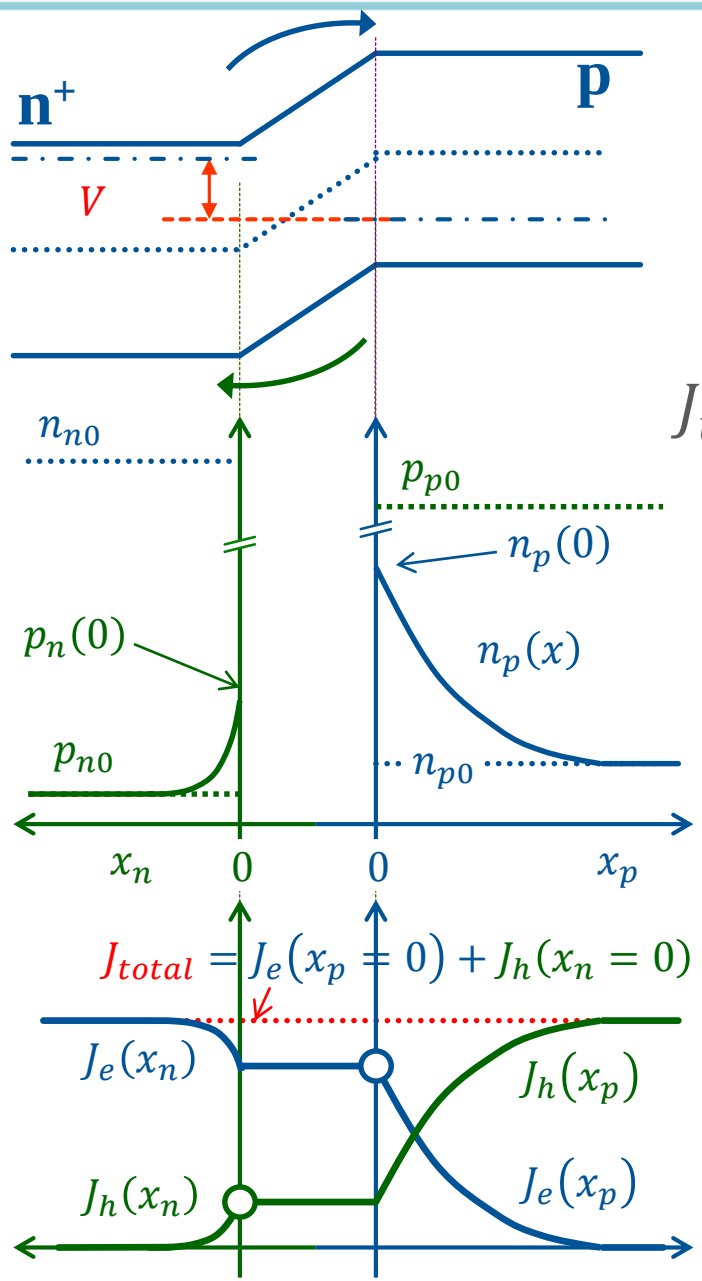

7. Current thru the n⁺p junction

$$J_{total} = |J_e(x_p = 0)| + |J_h(x_n = 0)|$$

$$J_{total} = q\left(\frac{n_{p0}D_e}{L_e} + \frac{p_{n0}D_h}{L_h}\right)\left\{exp\left(\frac{qV}{kT}\right) - 1\right\}$$

Electron current hole current

8. Current ratio

$$\gamma = \frac{electron\ current}{hole\ current} = \frac{n_{p0}}{p_{n0}}\frac{L_h}{L_e}\frac{D_e}{D_h}$$

$$= \frac{N_D}{N_A}\frac{L_h}{L_e}\frac{D_e}{D_h}$$

9. For n⁺p junction, $N_D \gg N_A$, $\gamma \gg 1$

Kazuya Masu

agenda

TOKYO TECH Pursuing Excellence

1. Currents that flow thru the bipolar transistor (デバイスに流れる電流の関係)
2. Review: analysis of n^+p junction [n^+p接合の特性解析（復習）]
3. Approximate analysis: n^+pn^- bipolar transistor（近似解法）
4. To understand the common-base current gain
5. Exact analysis（厳密解）:Supplement

n^+pn^- junction I-V characteristic

- Continuous eqs.（$\boldsymbol{E} = \boldsymbol{0}$）

$$\frac{\partial^2(n(x)-n_0)}{\partial x^2} - \frac{n(x)-n_0}{{L_e}^2} = 0$$

$$\frac{\partial^2(p(x)-p_0)}{\partial x^2} - \frac{p(x)-p_0}{{L_h}^2} = 0$$

$$n(x) - n_0 = A \cdot exp\left(+\frac{x}{L_e}\right) + B \cdot exp\left(-\frac{x}{L_e}\right)$$

$$p(x) - p_0 = A \cdot exp\left(+\frac{x}{L_h}\right) + B \cdot exp\left(-\frac{x}{L_h}\right)$$

- Definition：excess carrier density（過剰少数キャリア）

$$n'(x) \equiv n(x) - n_0$$
$$p'(x) \equiv p(x) - p_0$$

- $L = \sqrt{D\tau}$ ：拡散長 diffusion length

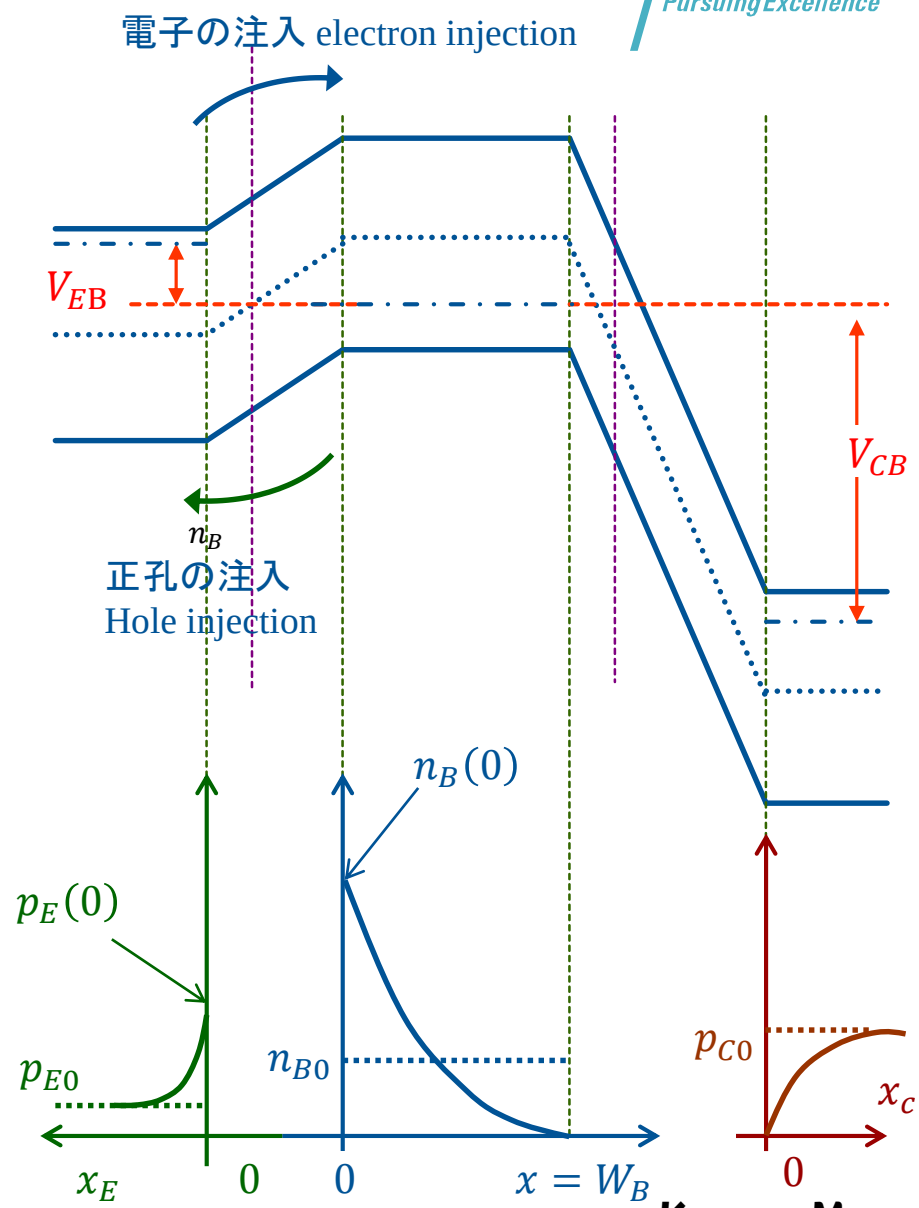

n^+pn^- junction I-V characteristic

- Boundary condition for base-region electron.

$$n_B(W_B) = 0 \text{ at } x = W_B$$

$$n_B(0) = n_{B0} \cdot e^{\frac{qV_{BE}}{kT}} \text{ at } x = 0$$

- If $W_B \ll L_B$, electron density can be easily derived.

$$n_B(x) = A \cdot e^{+\frac{x}{L_B}} + B \cdot e^{-\frac{x}{L_B}}$$

$$\sim B \cdot e^{-\frac{x}{L_B}} \rightarrow$$

- Electron current is given by

$$J_{n1} = qD_B \frac{n_B(0)}{W_B} =$$

$$q\frac{n_{B0}D_B}{W_B}\left\{exp\left(\frac{qV_{BE}}{kT}\right)\right\}$$

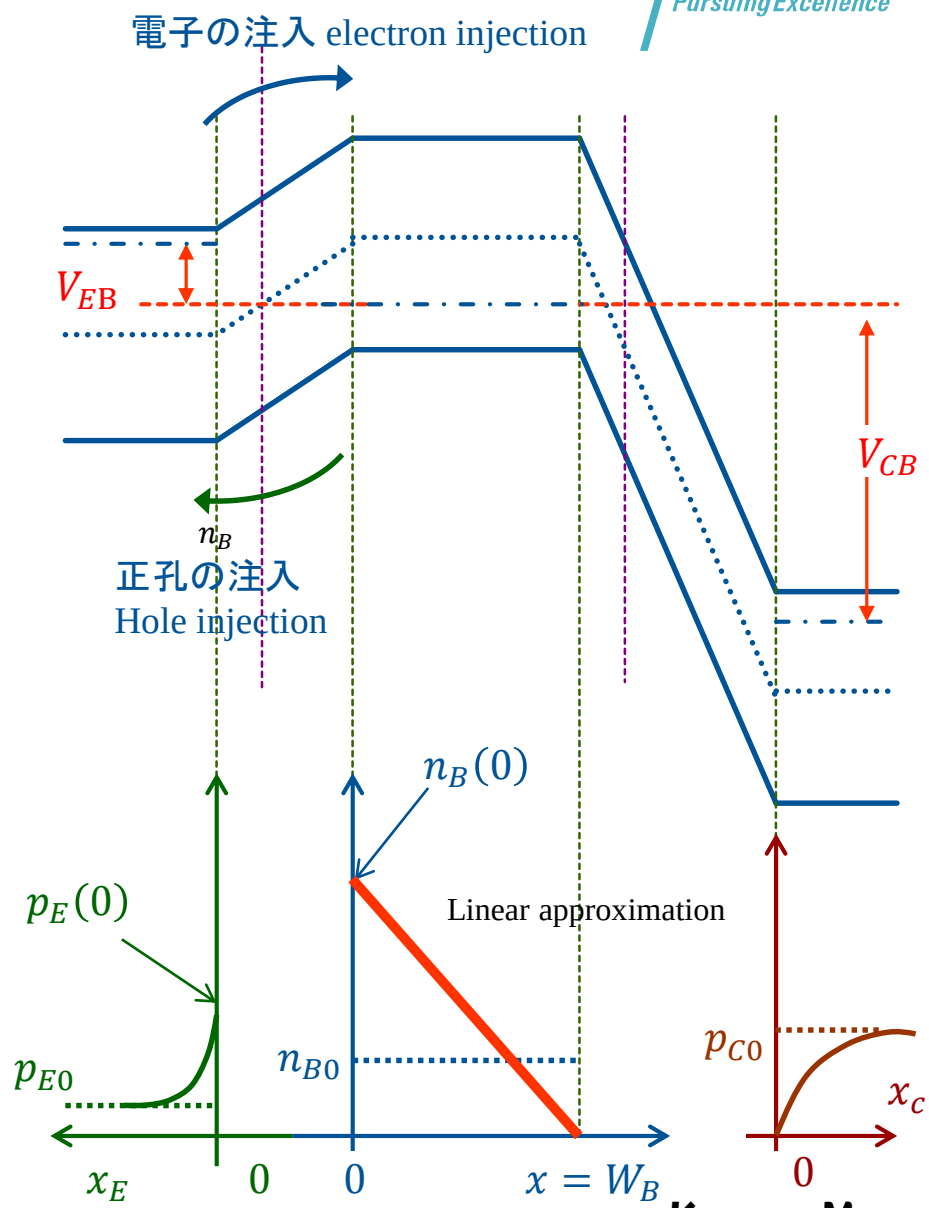

α_E: emitter efficiency エミッタ注入効率

handout

- Hole current at $x_E = 0$ is given by

$$J_{p1} = q\frac{p_{E0}D_E}{L_E}\left\{exp\left(\frac{qV_{BE}}{kT}\right) - 1\right\}$$

- α_E(emitter efficiency,エミッタ注入効率) is given by

$$\alpha_E =$$

N_E: Emitter doping concentration
N_B: Base doping concentration
D_E: Diffusion coefficient of hole in emitter region
D_B: Diffusion coefficient of electron in base region
~~D_B: Base doping concentration~~

W_B: Base width
L_E: Diffusion length of hole in emitter region

α_T: Base transfer factor ベース輸送効率

handout

TOKYO TECH Pursuing Excellence

- Amount of charge Q_B in base region is given by

$$Q_B = \frac{q n_B(0)\, W_B}{2}$$

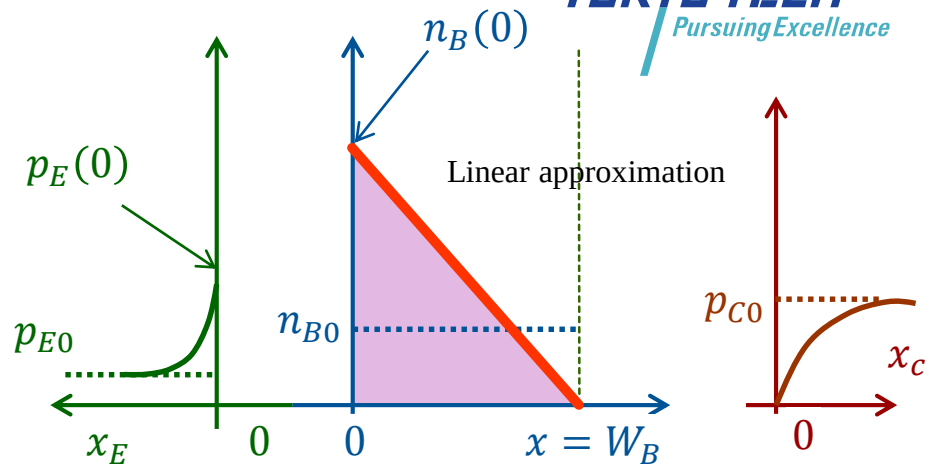

- Q_B is disappeared by recombination with average time of τ, where τ_B is minority carrier (electron) life time in base region. This is J_{n3}. （Q_Bは平均時間τ_Bで再結合して消失する。これがJ_{n3}である。）

$$J_{n3} = \frac{q n_B(0)\, W_B}{2\tau_B}$$

$$J_{n1} = q D_B \frac{n_B(0)}{W_B}$$

$$\alpha_T = \frac{J_{n2}}{J_{n1}} = \frac{J_{n1} - J_{n3}}{J_{n1}} = 1 - \frac{J_{n3}}{J_{n1}} =$$

α_C :コレクタ効率 collector multiplication factor

- Generally $\alpha_C \cong 1$
- Avalanche multiplication is induced by the strong inverse bias inside collector depletion region. In this case, α_C become greater than one.(逆方向の強い電界で、コレクタ空乏層内でなだれ増倍現象が起こる場合がある)

$$\alpha_C = \frac{J_{eC}}{J_e(x = W)} \approx \frac{1}{1 - \left(\frac{V_{CB}}{V_B}\right)^n}$$

J_{eC}:electron current in collector region,
V_B:Breakdown voltage （降伏電圧）

- Collector-base voltage should be less than V_B. （通常は降伏電圧より小さな電圧で動作させる。）

agenda

TOKYO TECH Pursuing Excellence

1. Currents that flow thru the bipolar transistor (デバイスに流れる電流の関係)
2. Review: analysis of n^+p junction [n^+p接合の特性解析（復習）]
3. Approximate analysis: n^+pn^- bipolar transistor（近似解法）
4. To understand the common-base current gain
5. Exact analysis（厳密解）:Supplement

n^+pn^-接合 電流の流れ

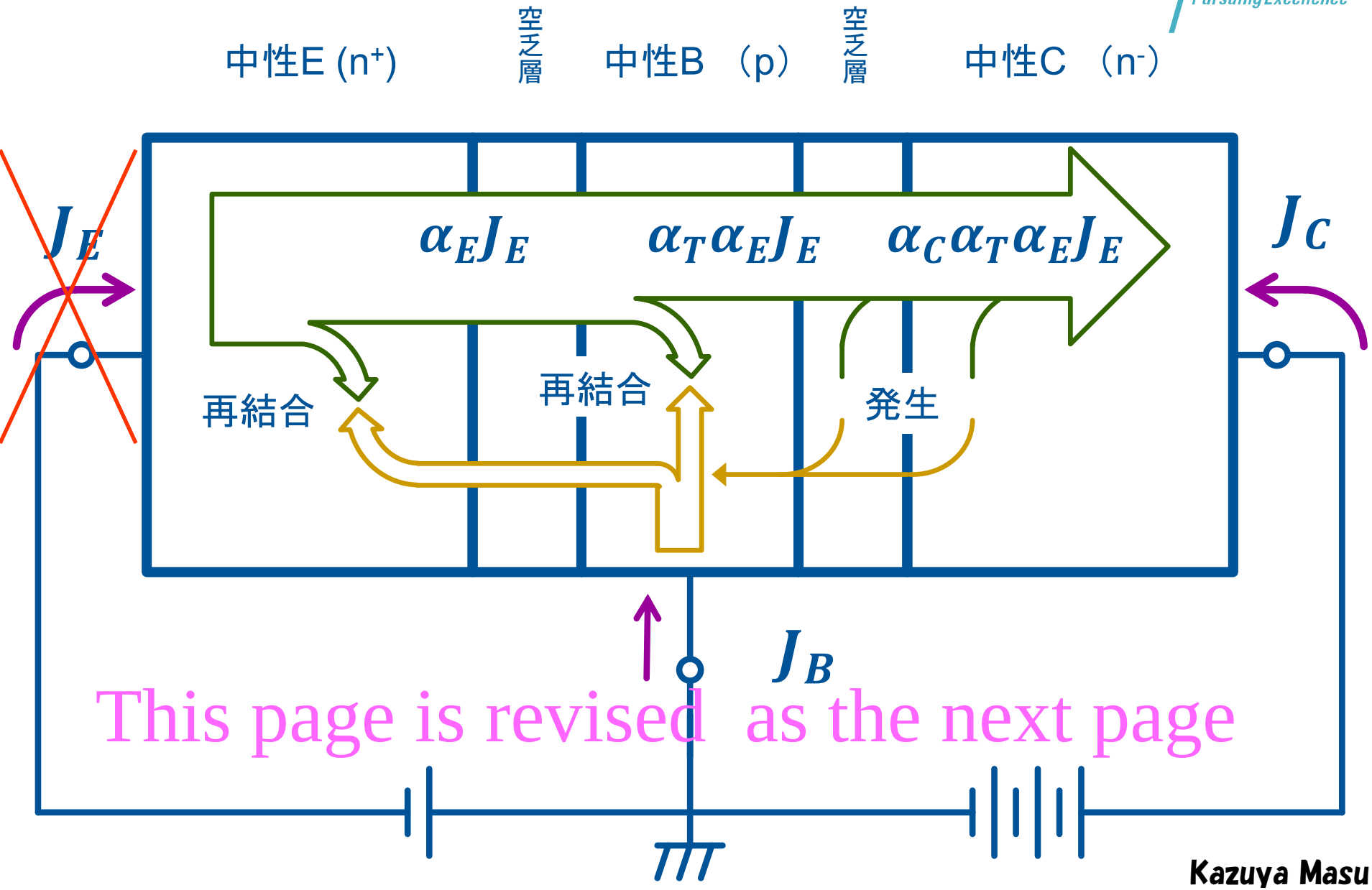

This page is revised as the next page

n^+pn^-接合 電流の流れ

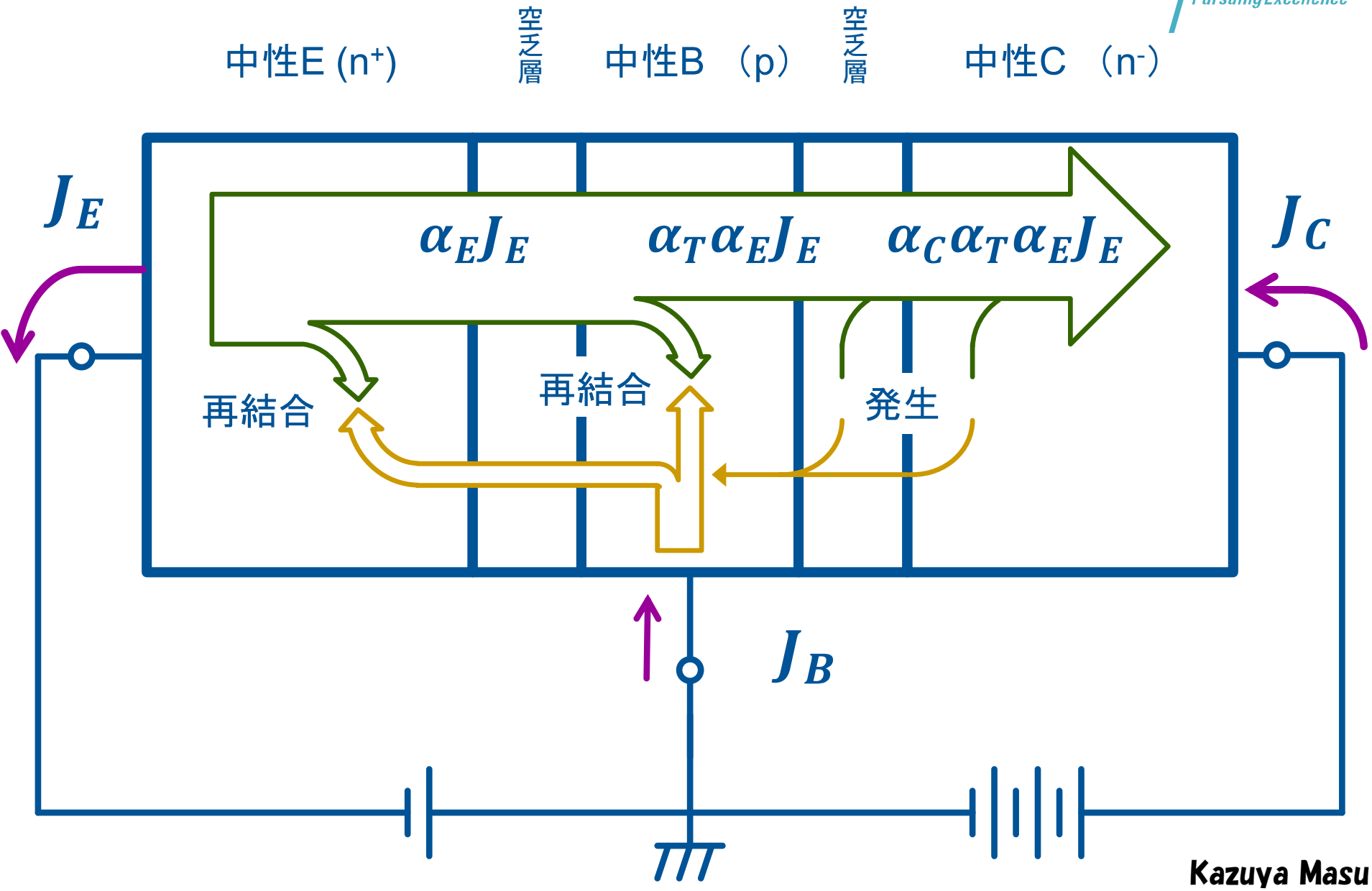
中性E (n+)
空乏層
中性B （p）
空乏層
中性C （n-）
J_E
$\alpha_E J_E$
$\alpha_T \alpha_E J_E$
$\alpha_C \alpha_T \alpha_E J_E$
J_C
再結合
再結合
発生
J_B

How to increase $\alpha = \alpha_E \cdot \alpha_T \cdot \alpha_c$

handout

$$\alpha_E \approx 1 - \frac{N_B}{N_E}\frac{D_E}{D_B}\frac{W_B}{L_E}$$

$$\alpha_T = 1 - \left(\frac{W_B}{L_B}\right)^2$$

N_E: Emitter doping concentration
N_B: Base doping concentration
D_E: Diffusion coefficient of hole in emitter region
D_B: Diffusion coefficient of electron in base region
~~D_B: Base doping concentration~~

W_B: Base width
L_E: Diffusion length of hole in emitter region

agenda

TOKYO TECH Pursuing Excellence

1. Currents that flow thru the bipolar transistor (デバイスに流れる電流の関係)
2. Review: analysis of n^+p junction [n^+p接合の特性解析(復習)]
3. Approximate analysis: n^+pn^- bipolar transistor (近似解法)
4. To understand the common-base current gain
5. Exact analysis (厳密解):Supplement

Detail derivation is not necessary for beginning student.
It is noted that The derivation is an good exercise of the second order linear differential equation. "5. Exact analysis is not included in the handout on April 28.

n^+pn^- junction: I-V characteristic

TOKYO TECH Pursuing Excellence

- The continuity and current equations of emitter, base, and collector regions are solved. The boundary conditions are easily inferred from pn junction analysis.
- エミッタ、ベース、コレクタ領域のそれぞれの少数キャリア連続の方程式と電流の式を解く。境界条件は、pn接合の電流電圧特性を求めたときから類推可能である。
- Axes of each layer are preferred to be defined independently.
- 全部の少数キャリアの連続方程式を解くならば、解が分かり易くなるように、x軸を定義して解くと良い。

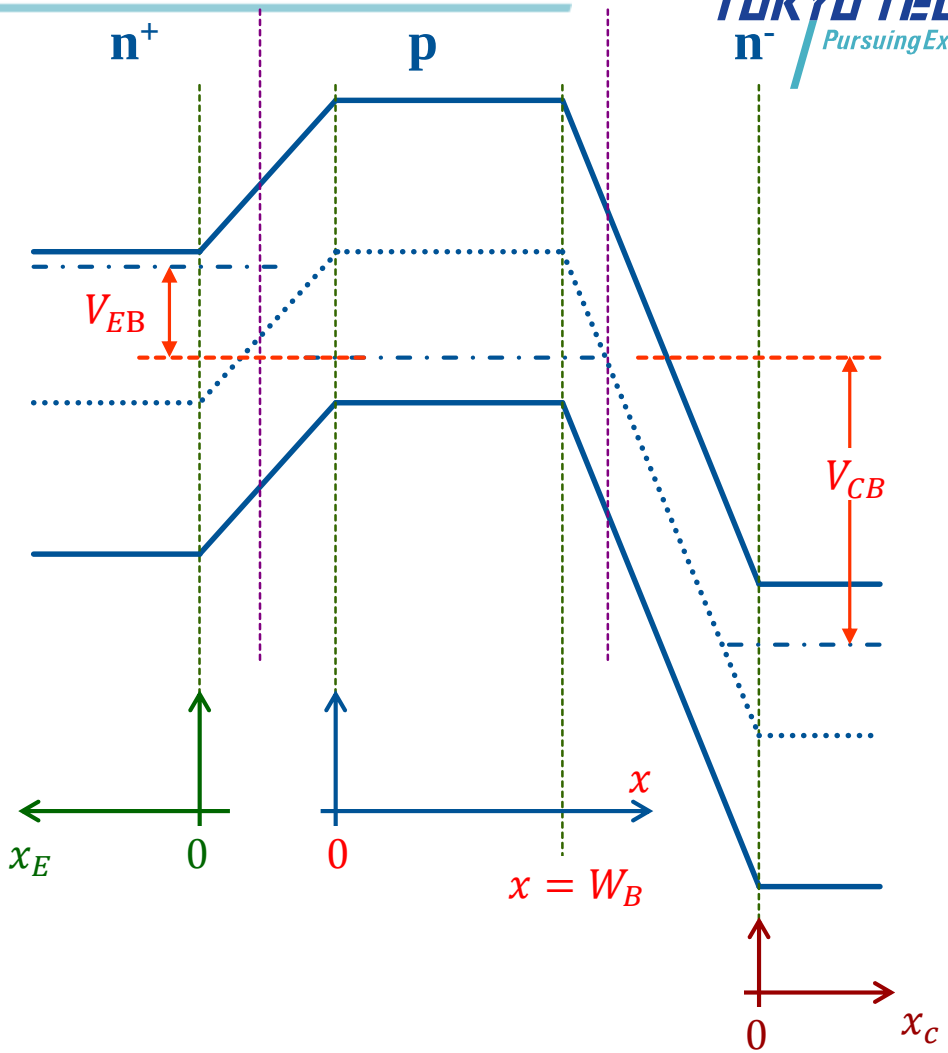

Doping conc. N_E
Majority carrier (elec) $n_E(x)$
Minority carrier (hole) $p_E(x)$
Equilibrium elec conc.: n_{E0}
Equilibrium hole conc.: p_{E0}

Doping conc. N_B
Minority carrier (elec) $n_B(x)$
Majority carrier (hole) $p_B(x)$
Equilibrium elec conc.: n_{B0}
Equilibrium hole conc.: p_{B0}

Doping conc. N_C
Majority carrier (elec) $n_C(x)$
Minority carrier (hole) $p_C(x)$
Equilibrium elec conc.: n_{C0}
Equilibrium hole conc.: p_{C0}

Kazuya Masu

n^+pn^- junction: I-V characteristic

TOKYO TECH Pursuing Excellence

- The continuity and current equations of emitter, base, and collector regions are solved. The boundary conditions are easily inferred from pn junction analysis.
- エミッタ、ベース、コレクタ領域のそれぞれの少数キャリア連続の方程式と電流の式を解く。境界条件は、pn接合の電流電圧特性を求めたときから類推可能

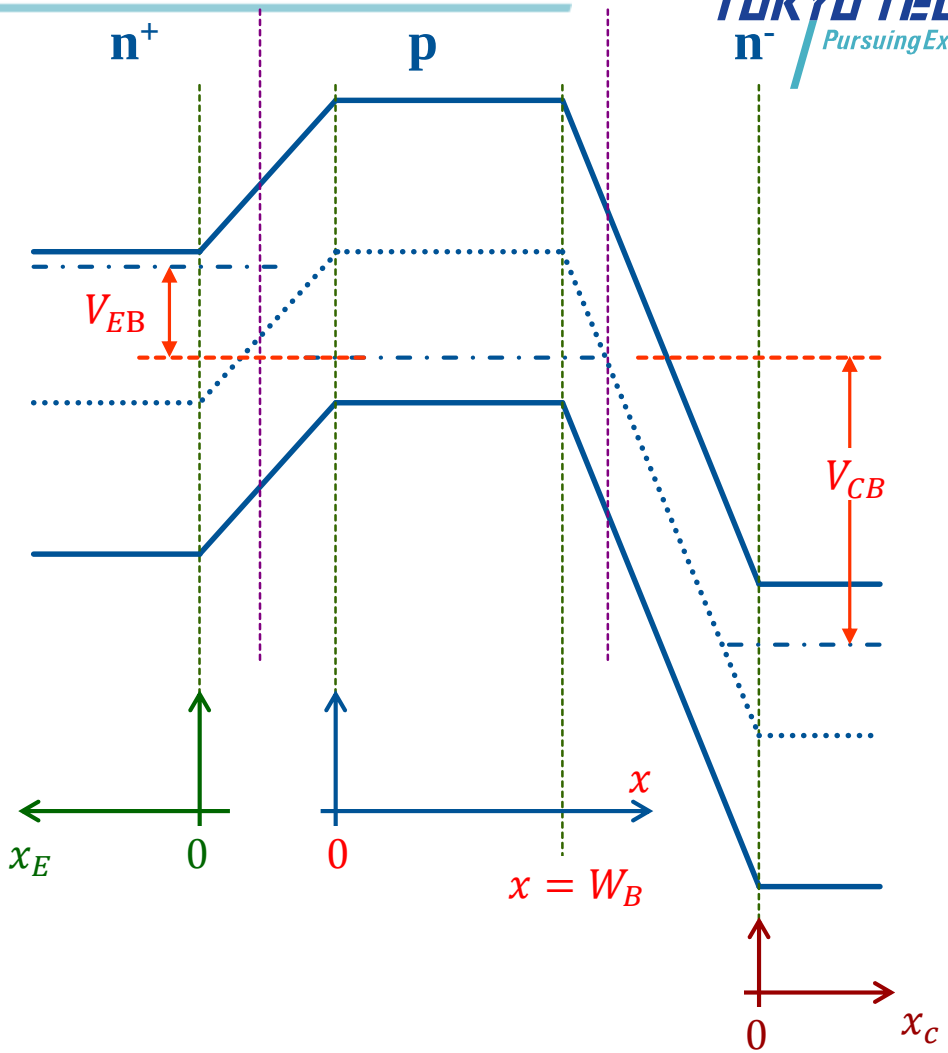

Doping conc. N_E
Majority carrier (elec) $n_E(x)$
Minority carrier (hole) $p_E(x)$
Equilibrium elec conc.: n_{E0}
Equilibrium hole conc.: p_{E0}

Doping conc. N_B
Minority carrier (elec) $n_B(x)$
Majority carrier (hole) $p_B(x)$
Equilibrium elec conc.: n_{B0}
Equilibrium hole conc.: p_{B0}

Doping conc. N_C
Majority carrier (elec) $n_C(x)$
Minority carrier (hole) $p_C(x)$
Equilibrium elec conc.: n_{C0}
Equilibrium hole conc.: p_{C0}

Kazuya Masu

n^+pn^- junction: I-V characteristic

TOKYO TECH Pursuing Excellence

- Axes of each layer are preferred to be defined independently.
- 全部の少数キャリアの連続方程式を解くならば、解が分かり易くなるように、x軸を定義して解くと良い。

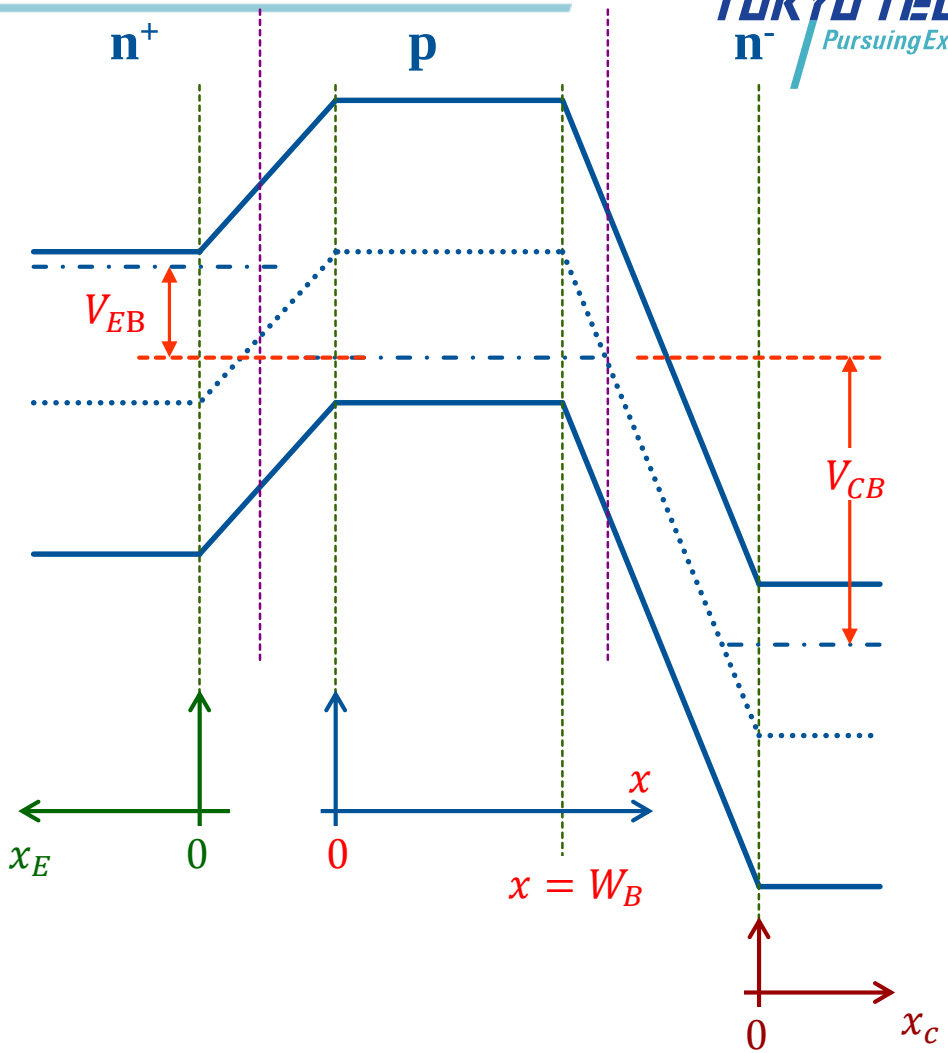

Doping conc. N_E
Majority carrier (elec) $n_E(x)$
Minority carrier (hole) $p_E(x)$
Equilibrium elec conc.: n_{E0}
Equilibrium hole conc.: p_{E0}

Doping conc. N_B
Minority carrier (elec) $n_B(x)$
Majority carrier (hole) $p_B(x)$
Equilibrium elec conc.: n_{B0}
Equilibrium hole conc.: p_{B0}

Doping conc. N_C
Majority carrier (elec) $n_C(x)$
Minority carrier (hole) $p_C(x)$
Equilibrium elec conc.: n_{C0}
Equilibrium hole conc.: p_{C0}

Kazuya Masu

n^+pn^- junction I-V characteristic

- Continuous eqs.（$\boldsymbol{E} = \boldsymbol{0}$）

$$\frac{\partial^2(n(x)-n_0)}{\partial x^2} - \frac{n(x)-n_0}{{L_e}^2} = 0$$

$$\frac{\partial^2(p(x)-p_0)}{\partial x^2} - \frac{p(x)-p_0}{{L_h}^2} = 0$$

$$n(x) - n_0 = A \cdot exp\left(+\frac{x}{L_e}\right) + B \cdot exp\left(-\frac{x}{L_e}\right)$$

$$p(x) - p_0 = A \cdot exp\left(+\frac{x}{L_h}\right) + B \cdot exp\left(-\frac{x}{L_h}\right)$$

- Definition：excess carrier density（過剰少数キャリア）

$$n'(x) \equiv n(x) - n_0$$
$$p'(x) \equiv p(x) - p_0$$

- $L = \sqrt{D\tau}$ ：拡散長 diffusion length

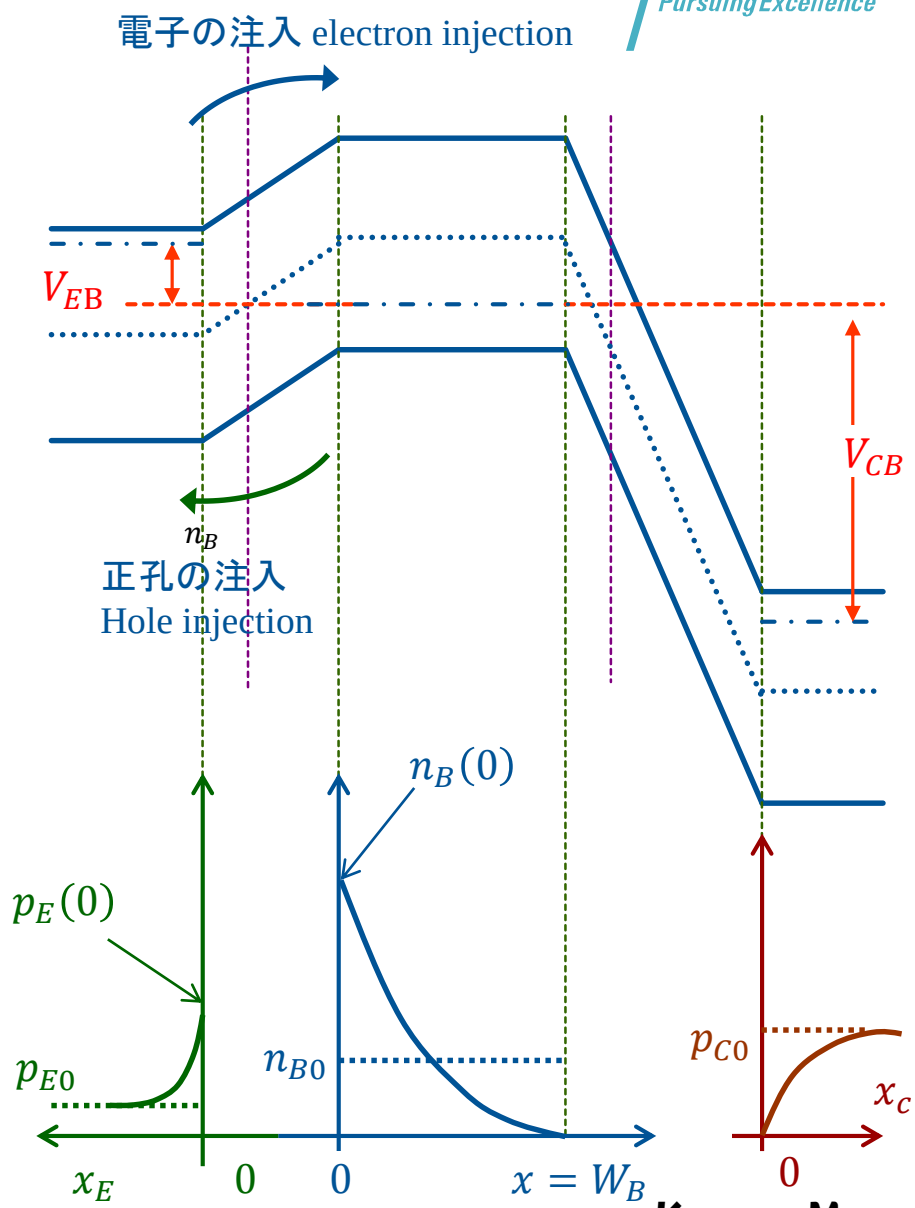

n^+pn^-接合 電流ー電圧特性

- 境界条件（エミッタ領域）

$$p_E{}'(x_E = \infty) = 0$$

$$p_E{}'(x_E = 0) = p_{E0}\left[exp\left(\frac{q\,V_{BE}}{kT}\right) - 1\right]$$

- 境界条件（ベース領域）

$$n_B{}'(x = 0) = n_{B0}\left[exp\left(\frac{q\,V_{BE}}{kT}\right) - 1\right]$$

$$n_B{}'(x = W_B) = n_{B0}\left[exp\left(\frac{q\,V_{CB}}{kT}\right) - 1\right]$$

- 境界条件（コレクタ領域）

$$p_C{}'(x_C = \infty) = 0$$

$$p_C{}'(x_C = 0) = P_{C0}\left[exp\left(\frac{q\,V_{CB}}{kT}\right) - 1\right]$$

V_{CB}は、負に大きな電圧であるので、

$$exp\left(\frac{q\,V_{CB}}{kT}\right) \to 0$$

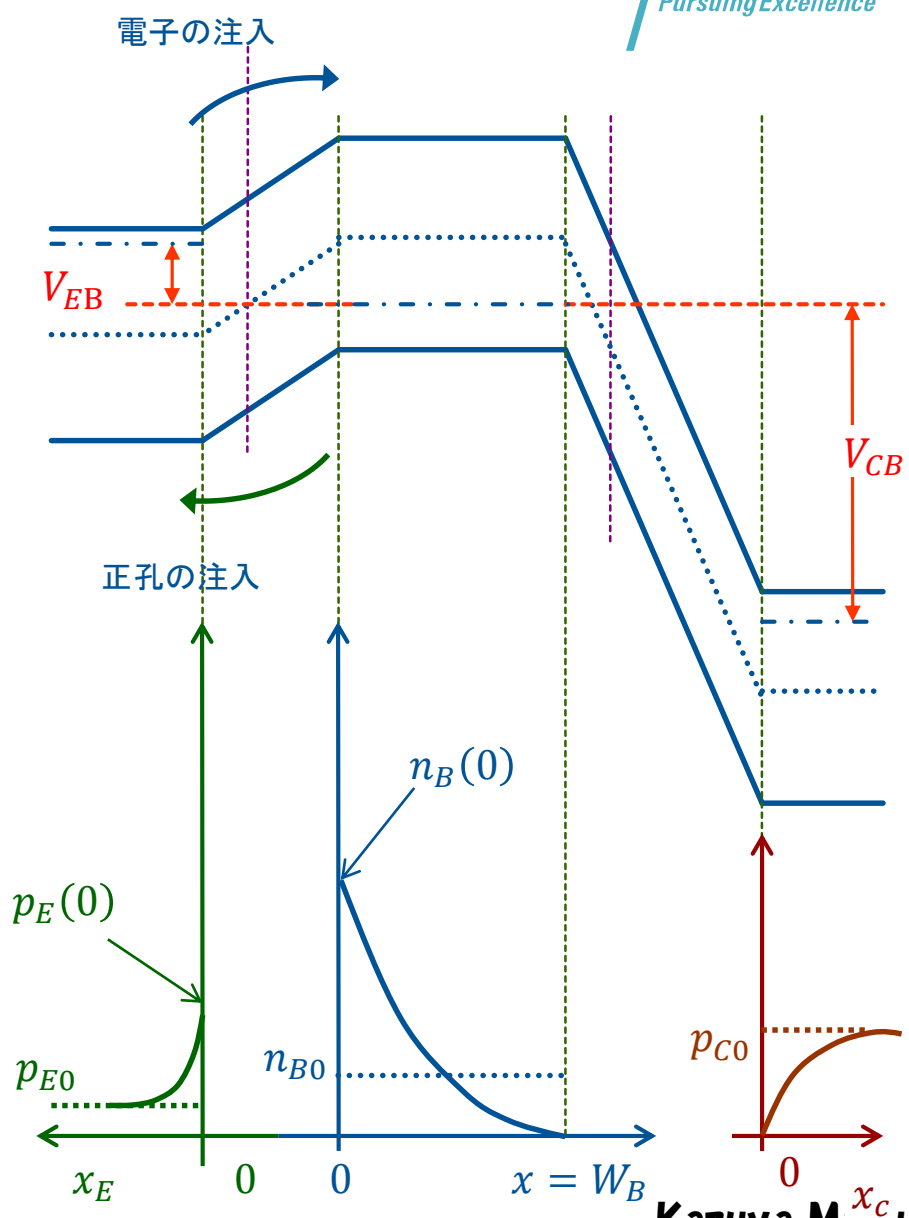

n^+pn^-接合 電流ー電圧特性

W ：ベース幅

$L_x(x: E, B, C)$ ：拡散長

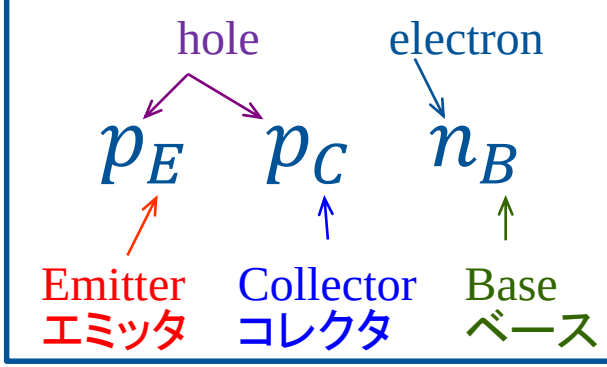

●エミッタ領域（正孔）

$$p_E{}'(x_E) = p_{E0}\left[exp\left(\frac{q\,V_{BE}}{kT}\right) - 1\right]\cdot \exp\left(-\frac{x_E}{L_E}\right)$$

●ベース領域（電子）

$$n_B{}'(x) = \frac{n_B{}'(W) - n_B{}'(0)e^{-\frac{W}{L_B}}}{2\sinh\left(\frac{W}{L_B}\right)}\cdot e^{+\frac{x}{L_B}} - \frac{n_B{}'(W) - n_B{}'(0)e^{+\frac{W}{L_B}}}{2\sinh\left(\frac{W}{L_B}\right)}\cdot e^{-\frac{x}{L_B}}$$

●コレクタ領域（正孔）

$$p_C{}'(x_C) = p_{C0}\left[exp\left(\frac{q\,V_{CB}}{kT}\right) - 1\right]\cdot \exp\left(-\frac{x_C}{L_E}\right)$$

n^+pn^-接合 電流ー電圧特性

- ベース領域のキャリア密度
- $W \to \infty$, or $\frac{W}{L_B} \gg 1$ のとき、

$$n_B{}'(x) = \frac{n_B{}'(W) - n_B{}'(0)e^{-\frac{W}{L_B}}}{2\sinh\left(\frac{W}{L_B}\right)} \cdot e^{+\frac{x}{L_B}} - \frac{n_B{}'(W) - n_B{}'(0)e^{+\frac{W}{L_B}}}{2\sinh\left(\frac{W}{L_B}\right)} \cdot e^{-\frac{x}{L_B}}$$

≈ 0

≈ 0

≈ 1

$$2\sinh\left(\frac{W}{L_B}\right) \approx e^{+\frac{W}{L_B}}$$

- $n_B{}'(x) = n_B{}'(0) \cdot e^{-\frac{x}{L_B}}$
- PN接合のとき同じ。トランジスタ動作なし。

n^+pn^-接合 電流ー電圧特性

TOKYO TECH Pursuing Excellence

●エミッタ／ベース接合の電流

$$J_E = J_e(x=0) + J_h(x_E=0)$$

$$= q\,D_B \left.\frac{\partial n_B(x)}{\partial x}\right|_{x=0} + q\,D_E \left.\frac{\partial p_E(x_E)}{\partial x_E}\right|_{x_E=0}$$

$$J_E = q\frac{D_B n_{B0}}{L_B}\coth\left(\frac{W}{L_B}\right)\left[\left(e^{\frac{q\,V_{BE}}{kT}}-1\right) - \frac{1}{cosh\left(\frac{W}{L_B}\right)}\left(e^{\frac{q\,V_{CB}}{kT}}-1\right)\right] + q\frac{D_E p_{E0}}{L_E}\left(e^{\frac{q\,V_{BE}}{kT}}-1\right)$$

n^+pn^-接合 電流ー電圧特性

TOKYO TECH Pursuing Excellence

● ベース／コレクタ接合の電流

$$J_C = J_e(x = W) + J_h(x_C = 0)$$

$$= q\,D_B \left.\frac{\partial n_B(x)}{\partial x}\right|_{x=W} + q\,D_C \left.\frac{\partial p_C(x_C)}{\partial x_C}\right|_{x_C=0}$$

$$J_C = q\frac{D_B n_{B0}}{L_B}\frac{1}{\sinh\left(\frac{W}{L_B}\right)}\left[\left(e^{\frac{qV_{BE}}{kT}} - 1\right) - cosh\left(\frac{W}{L_B}\right)\left(e^{\frac{qV_{CB}}{kT}} - 1\right)\right]$$
$$-q\frac{D_C p_{C0}}{L_C}\left(e^{\frac{qV_{CB}}{kT}} - 1\right)$$

● ベース電流　$-\boldsymbol{J_E} + \boldsymbol{J_C} + \boldsymbol{J_B} = \mathbf{0}$　より求まる。

双曲線関数

$$\sinh x = \frac{e^x - e^{-x}}{2} \approx x \quad for\ x \ll 1$$

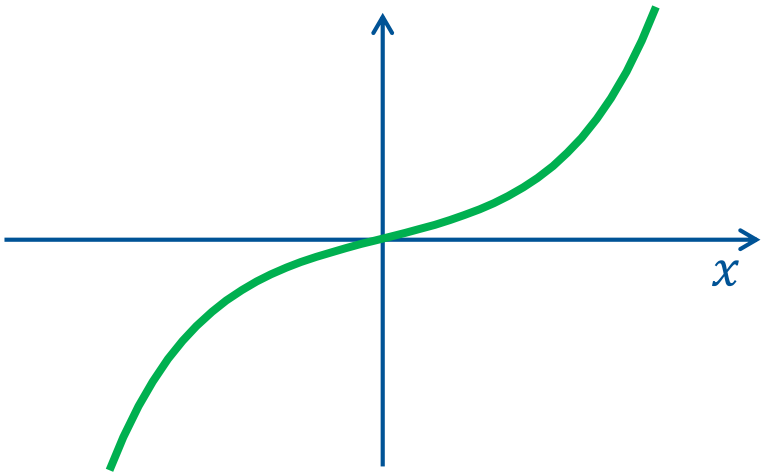

$$\cosh x = \frac{e^x + e^{-x}}{2} \approx 1 + \frac{x^2}{2} \quad for\ x \ll 1$$

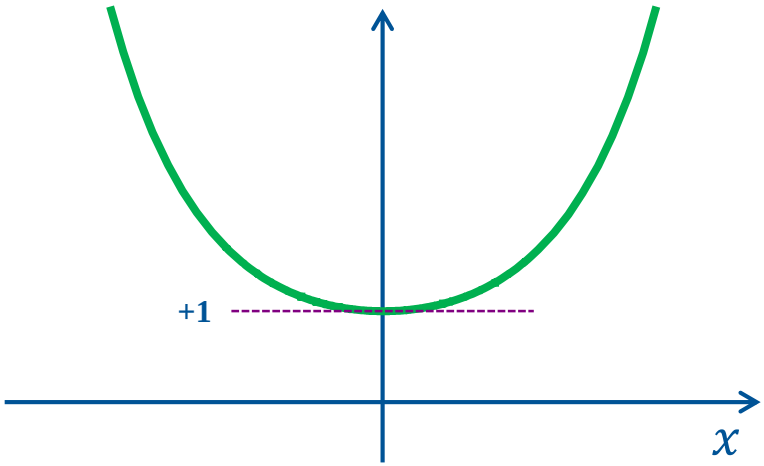

$$\tanh x = \frac{\sinh x}{\cosh x} \approx x \quad for\ x \ll 1$$

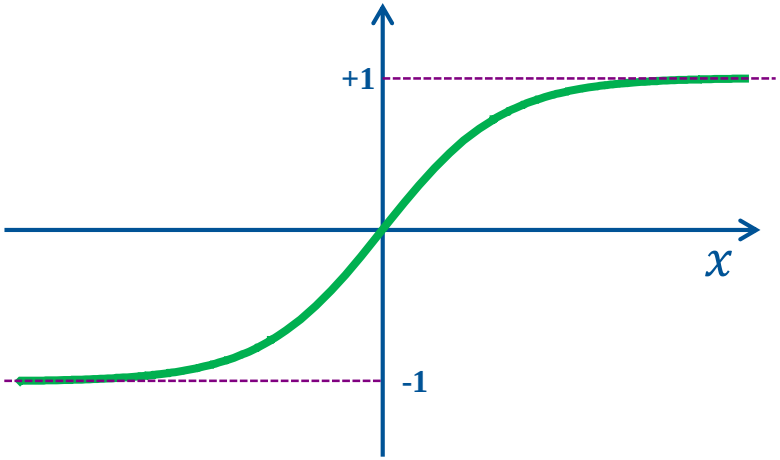

$$\coth x = \frac{\cosh x}{\sinh\ x} \approx \frac{1}{x} \quad for\ x \ll 1$$

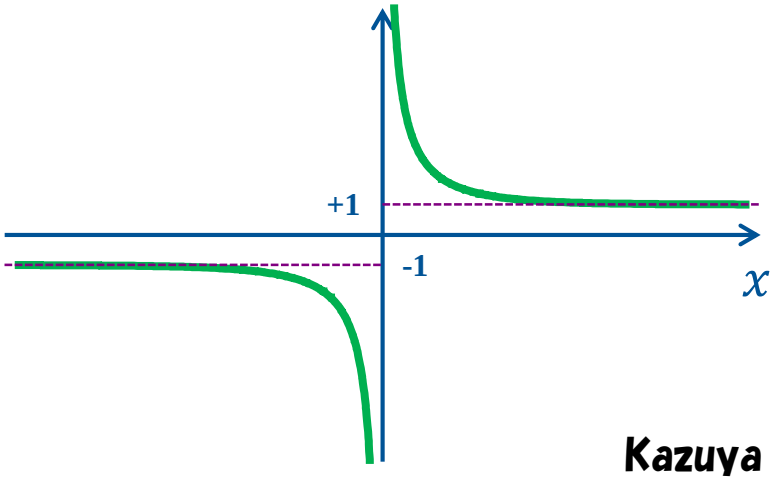

n^+pn^-接合 電流ー電圧特性

- $\frac{W}{L_B} \ll 1$ ベース幅が十分に薄いとき、

$$\cosh\left(\frac{W}{L_B}\right) \approx 1, \qquad \sinh\left(\frac{W}{L_B}\right) \approx \frac{W}{L_B}, \qquad \coth\left(\frac{W}{L_B}\right) \approx \frac{L_B}{W},$$

$$J_E = q\frac{D_B n_{B0}}{L_B}\underbrace{\coth\left(\frac{W}{L_B}\right)}_{\approx L_B/W}\left[\left(e^{\frac{qV_{BE}}{kT}}-1\right) - \frac{1}{\underbrace{\cosh\left(\frac{W}{L_B}\right)}_{\approx 1}}\left(\underbrace{e^{\frac{qV_{CB}}{kT}}}_{\approx 0}-1\right)\right] + q\frac{D_E p_{E0}}{L_E}\left(e^{\frac{qV_{BE}}{kT}}-1\right)$$

$$J_E \approx q\frac{D_B n_{B0}}{L_B}\frac{L_B}{W}e^{\frac{qV_{BE}}{kT}} + q\frac{D_E p_{E0}}{L_E}\left(e^{\frac{qV_{BE}}{kT}}-1\right) \approx q\frac{D_B n_{B0}}{W}e^{\frac{qV_{BE}}{kT}}$$

電子電流 J_e　　正孔電流 J_h

n^+pn^-接合 電流ー電圧特性

$$J_E \approx q\frac{D_B n_{B0}}{L_B}\frac{L_B}{W}e^{\frac{qV_{BE}}{kT}} + q\frac{D_E p_{E0}}{L_E}\left(e^{\frac{qV_{BE}}{kT}} - 1\right) \approx q\frac{D_B n_{B0}}{W}e^{\frac{qV_{BE}}{kT}}$$

電子電流 J_e　　正孔電流 J_h

$$\frac{J_e[electron\ Current]}{J_h\ [hole\ Current]} \approx \frac{D_B}{D_E}\frac{L_B}{W}\frac{n_{B0}}{p_{E0}} = \frac{D_B}{D_E}\frac{L_B}{W}\frac{N_E}{N_B}$$

$$\frac{J_e}{J_h} \propto \frac{\text{拡散長（ベース中の電子）}}{\text{ベース幅}}\frac{\text{エミッタドーピング量}}{\text{ベースドーピング量}}$$

J_e/J_hを増加されるためには、
①ベース幅を狭く、②エミッタドーピング量を大きくする。

n^+pn^-接合 電流ー電圧特性

- $\frac{W}{L_B} \ll 1$ ベース幅が十分に薄いとき、

$$\cosh\left(\frac{W}{L_B}\right) \approx 1, \qquad \sinh\left(\frac{W}{L_B}\right) \approx \frac{W}{L_B}, \qquad \coth\left(\frac{W}{L_B}\right) \approx \frac{L_B}{W},$$

$$J_C = q\frac{D_B n_{B0}}{L_B}\underbrace{\frac{1}{\sinh\left(\frac{W}{L_B}\right)}}_{\approx L_B/W}\left[\left(e^{\frac{qV_{BE}}{kT}}-1\right)-\underbrace{\cosh\left(\frac{W}{L_B}\right)}_{\approx 1}\left(\underbrace{e^{\frac{qV_{CB}}{kT}}}_{\approx 0}-1\right)\right] - q\frac{D_C p_{C0}}{L_C}\left(e^{\frac{qV_{CB}}{kT}}-1\right)$$

$$J_C \approx q\frac{D_B n_{B0}}{L_B}\frac{L_B}{W}e^{\frac{qV_{BE}}{kT}} + q\frac{D_C p_{C0}}{L_C} \approx q\frac{D_B n_{B0}}{W}e^{\frac{qV_{BE}}{kT}}$$

n^+pn^-接合 電流ー電圧特性

TOKYO TECH Pursuing Excellence

● ベース領域のキャリア密度 $\frac{W}{L_B} \ll 1$ のとき

$$n_B{}'(x) = \frac{\overbrace{n_B{}'(W)}^{\approx 0} - n_B{}'(0)e^{-\frac{W}{L_B}}}{2\sinh\left(\frac{W}{L_B}\right)} \cdot e^{+\frac{x}{L_B}} - \frac{\overbrace{n_B{}'(W)}^{\approx 0} - n_B{}'(0)e^{+\frac{W}{L_B}}}{2\sinh\left(\frac{W}{L_B}\right)} \cdot e^{-\frac{x}{L_B}}$$

$$n_B{}'(x) = n_B{}'(0)\frac{\sinh\left(\frac{W-x}{L_B}\right)}{\sinh\left(\frac{W}{L_B}\right)} \approx n_{B0}\left[exp\left(\frac{q\,V_{BE}}{kT}\right) - 1\right]\frac{W-x}{W}$$

ベース領域のキャリア分布

TOKYO TECH
Pursuing Excellence

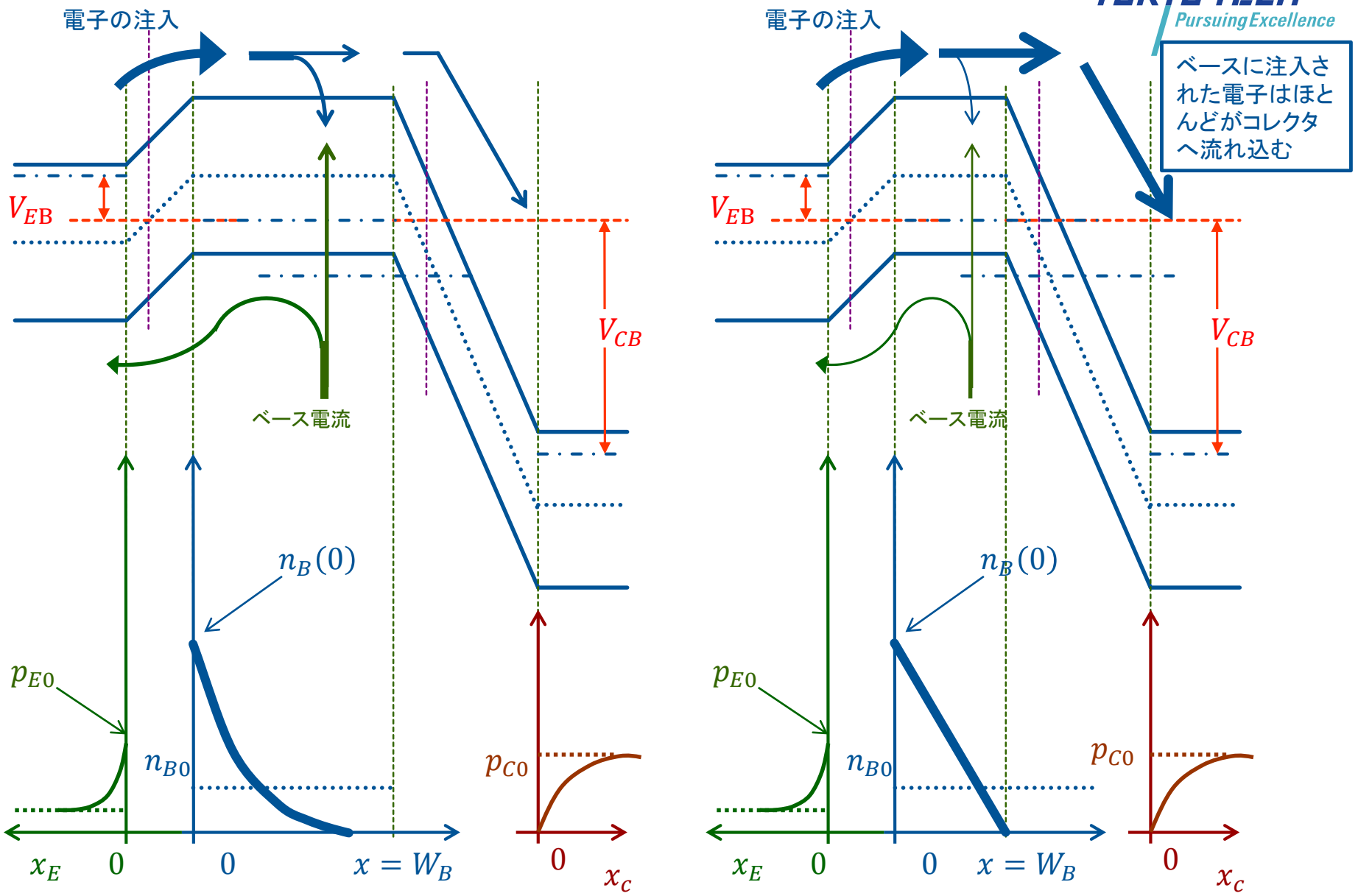

n^+pn^-接合 電流の流れ

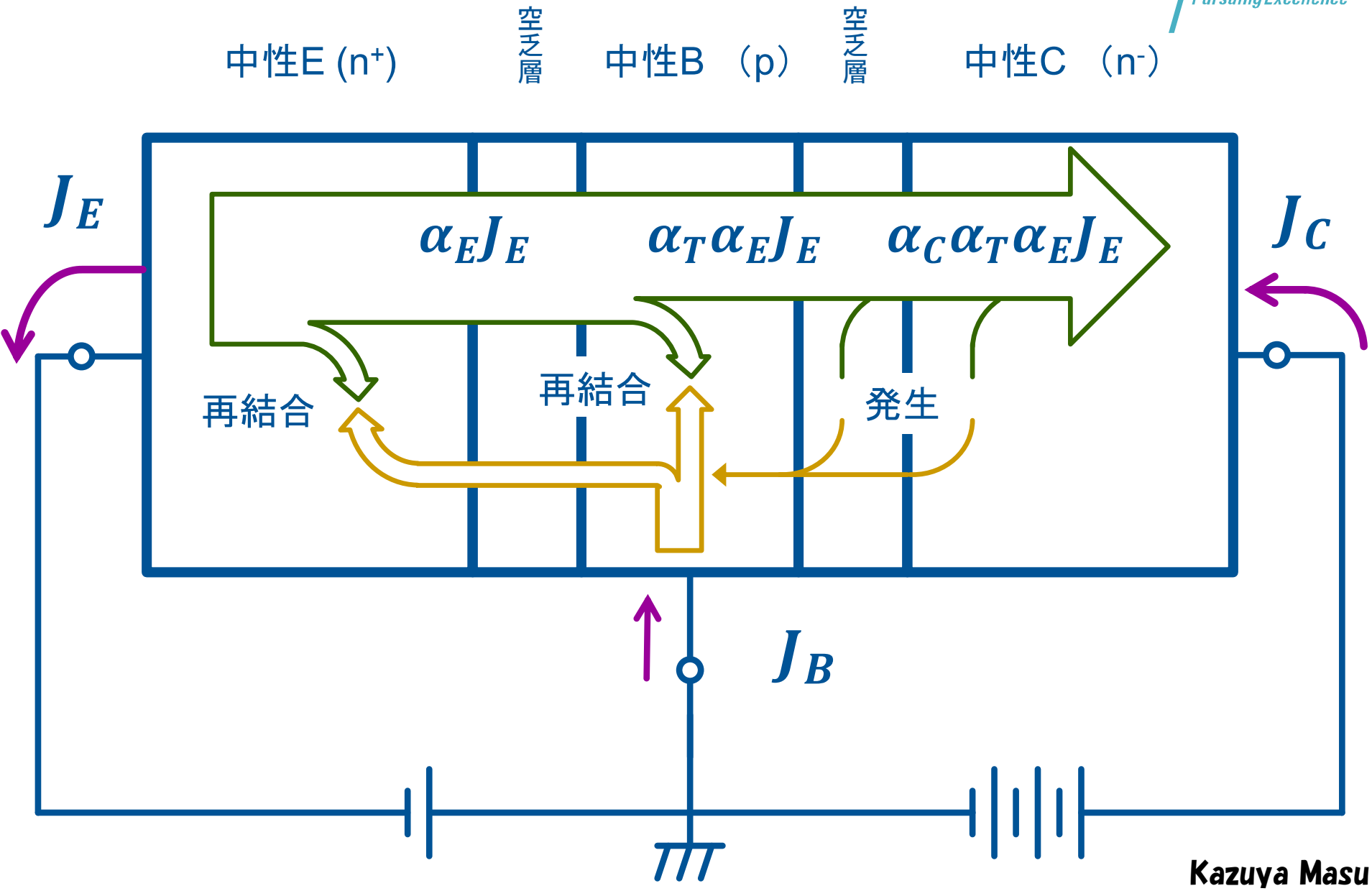
中性E (n+)
空乏層
中性B （p）
空乏層
中性C （n-）
J_E
$\alpha_E J_E$
$\alpha_T \alpha_E J_E$
$\alpha_C \alpha_T \alpha_E J_E$
J_C
再結合
再結合
発生
J_B

電流伝送率 $\gamma = \alpha_E \alpha_T \alpha_C$

- α_E : エミッタ注入効率 emitter efficiency
- α_T : ベース輸送効率 base transfer factor
- α_C : コレクタ効率 collector multiplication factor

$$\alpha_E = \frac{incremental\ \ electron\ current\ from\ emitter}{incremental\ tolal\ emitter\ current} = \frac{\partial J_e(x=0)}{\partial J_E}$$

$$\alpha_E = \left[1 + \frac{p_{E0}}{n_{B0}} \frac{D_E}{D_B} \frac{L_B}{L_E} \tanh\left(\frac{W}{L_B}\right)\right]^{-1} \approx 1 - \frac{p_{E0}}{n_{B0}} \frac{D_E}{D_B} \frac{W}{L_E} = 1 - \frac{N_B}{N_E} \frac{D_E}{D_B} \frac{W}{L_E}$$

電流伝送率

- α_E : エミッタ注入効率 emitter efficiency
- α_T : ベース輸送効率 base transfer factor
- α_C : コレクタ効率

$$\alpha_T = \frac{incremental\ \ electron\ current\ reaching\ collector}{incremental\ electron\ current\ from\ the\ emmitter} = \frac{\partial J_e(x=W)}{\partial J_e(x=0)}$$

$$\alpha_T = \frac{1}{\cosh\left(\frac{W}{L_B}\right)} \approx 1 - \frac{W^2}{2\,{L_B}^2}$$

$$\cosh x \approx 1 + \frac{x^2}{2}$$

演習問題

1. エミッタ領域の電子濃度が次式になることを示せ。

$$n_B{}'(x) = \frac{n_B{}'(W) - n_B{}'(0)e^{-\frac{W}{L_B}}}{2\sinh\left(\frac{W}{L_B}\right)} \cdot e^{+\frac{x}{L_B}} - \frac{n_B{}'(W) - n_B{}'(0)e^{+\frac{W}{L_B}}}{2\sinh\left(\frac{W}{L_B}\right)} \cdot e^{-\frac{x}{L_B}}$$

2. エミッタ注入効率（ α_E ）が、次式になることを示せ。

$$\alpha_E = \left[1 + \frac{p_{E0}}{n_{B0}}\frac{D_E}{D_B}\frac{L_B}{L_E}\tanh\left(\frac{W}{L_B}\right)\right]^{-1} \approx 1 - \frac{p_{E0}}{n_{B0}}\frac{D_E}{D_B}\frac{W}{L_E} = 1 - \frac{N_B}{N_E}\frac{D_E}{D_B}\frac{W}{L_E}$$

Today's summary