2010 2nd semester
Wireless Commun. Eng. Ⅱ

#5: MIMO Channel Capacity

Kei Sakaguchi
<sakaguchi@mobile.ee.titech.ac.jp>
Nov. 17, 2010

Schedule (1st half)

	Date	Text	Contents
#1	Oct. 6	A-1, B-1	Introduction
#2	Oct. 13	B-5, B-6	Fundamentals of wireless commun.
#3	Oct. 20	B-12	OFDM for wireless broadband
#4	Nov. 10	B-7	Array signal processing
#5	Nov. 17	A-3, B-10	MIMO channel capacity
#6	Nov. 24	B-2, 3	Spatial channel model

Agenda

- Aim of today

  Derive throughput performance of
  MIMO communication system

- Contents

  - SISO, SIMO/MISO channel capacity
  - MIMO channel capacity
    - Transmit & receive diversity
    - Spatial multiplexing, SVD-MIMO
    - Water filling power allocation
  - Measurement on MIMO channel capacity

Warming Up

Question

Calculate Singular Value Decomposition (SVD) of matrix $\mathbf{H}$

$$\mathbf{H} = \begin{bmatrix} 1 & 1/2 \\ 0 & \sqrt{3}/2 \end{bmatrix}$$

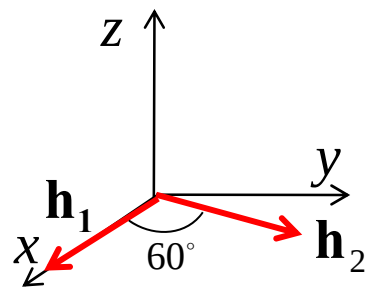

Singular Value Decomposition (SVD)

$$\mathbf{H} = \mathbf{U}\,\mathbf{\Sigma}\,\mathbf{V}^H = \sqrt{\lambda_1}\mathbf{u}_1\mathbf{v}_1^H + \sqrt{\lambda_2}\mathbf{u}_2\mathbf{v}_2^H + \cdots + \sqrt{\lambda_m}\mathbf{u}_m\mathbf{v}_m^H$$

Singular values: $\mathbf{\Sigma} = \mathrm{diag}\left[\sqrt{\lambda_1} \quad \sqrt{\lambda_2} \quad \cdots \quad \sqrt{\lambda_m}\right] \qquad m = \mathrm{rank}(\mathbf{H})$

Singular matrices: $\mathbf{U}^H\mathbf{U} = \mathbf{I} \qquad \mathbf{V}^H\mathbf{V} = \mathbf{I}$

$$\mathbf{R}_\mathrm{r} = \mathbf{H}\mathbf{H}^H = \mathbf{U}\,\mathbf{\Sigma}\,\mathbf{V}^H\mathbf{V}\,\mathbf{\Sigma}\,\mathbf{U}^H = \mathbf{U}\,\mathbf{\Lambda}\,\mathbf{U}^H$$

$$\mathbf{R}_\mathrm{t} = \mathbf{H}^H\mathbf{H} = \mathbf{V}\,\mathbf{\Sigma}\,\mathbf{U}^H\mathbf{U}\,\mathbf{\Sigma}\,\mathbf{V}^H = \mathbf{V}\,\mathbf{\Lambda}\,\mathbf{V}^H$$

$$\mathbf{\Lambda} = \mathrm{diag}\left[\lambda_1 \quad \lambda_2 \quad \cdots \quad \lambda_m\right]$$

SISO System

Received signal

$$y(t) = hs(t) + n(t)$$

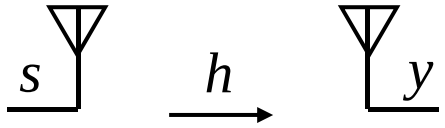

Output SNR

$$\gamma = \frac{\mathrm{E}[|hs(t)|^2]}{\mathrm{E}[|n(t)|^2]} = \frac{|h|^2 P}{\sigma^2}$$

PDF of output SNR in Rayleigh fading

$$f(\gamma) = \frac{1}{\bar{\gamma}} \exp\left(-\frac{\gamma}{\bar{\gamma}}\right)$$

Channel capacity

$$C_{\mathrm{SISO}}(\gamma) = \log_2\left(1 + \frac{|h|^2 P}{\sigma^2}\right)$$

Average channel capacity

$$\bar{C}_{\mathrm{SISO}}(\gamma) = \int f(\gamma) C_{\mathrm{SISO}}(\gamma) \mathrm{d}\gamma$$

SISO Channel Capacity

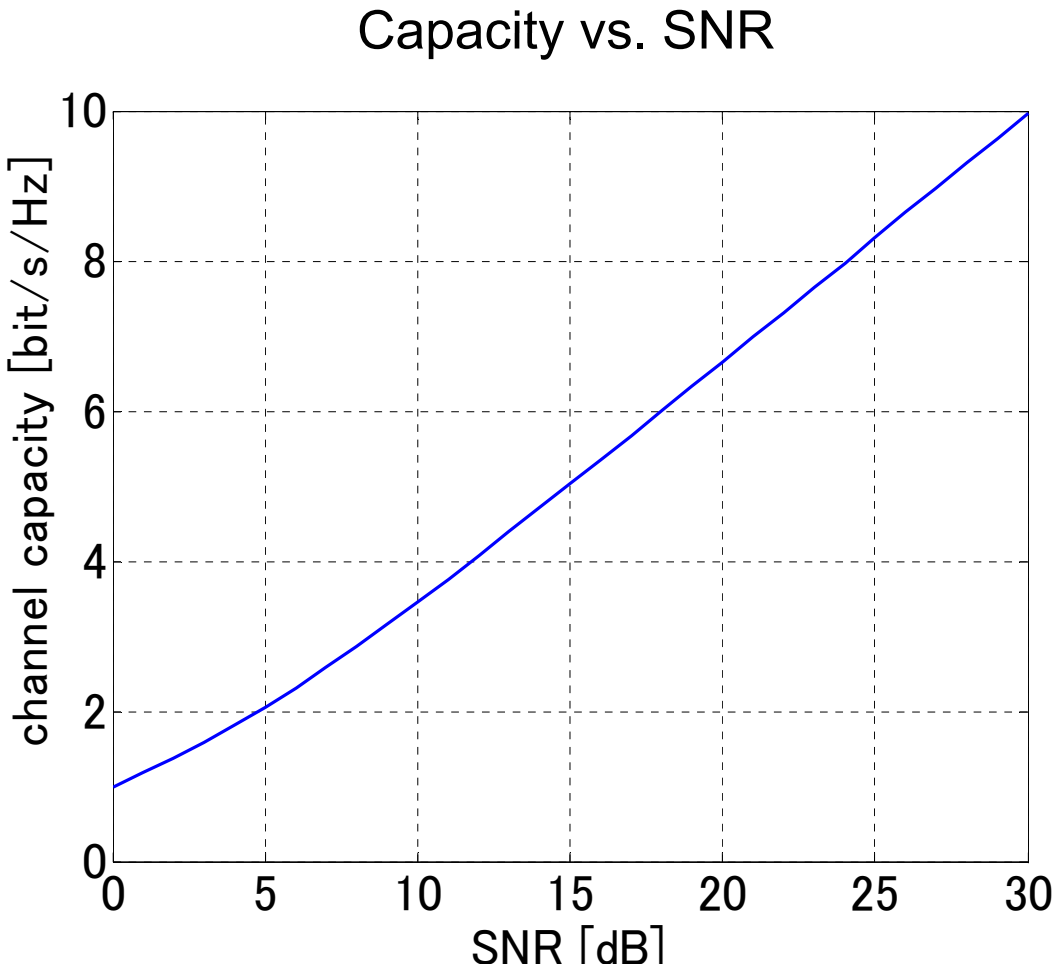

SIMO System

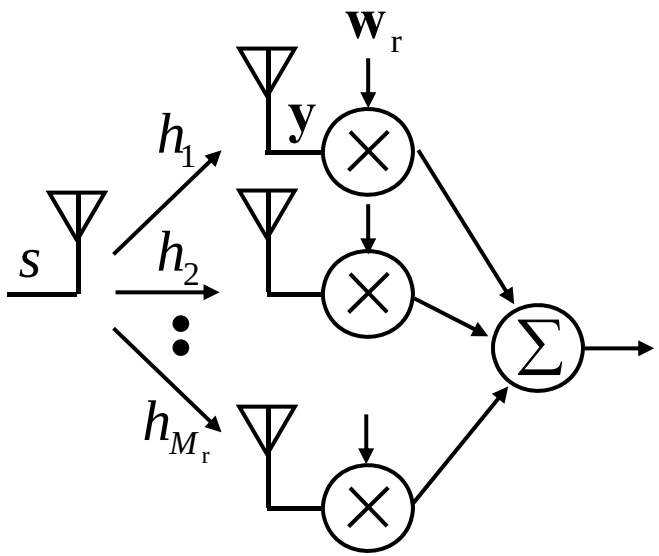

Received signal vector

$$\mathbf{y}(t) = \mathbf{h}s(t) + \mathbf{n}(t)$$

Output SNR

$$\gamma = \max_{\mathbf{w}_{\mathrm{r}}} \frac{\mathrm{E}[\left|\mathbf{w}_{\mathrm{r}}^H \mathbf{h}s\right|^2]}{\mathrm{E}[\left|\mathbf{w}_{\mathrm{r}}^H \mathbf{n}\right|^2]} = \sum_{i=1}^{M_r} \left|h_i\right|^2 \frac{P}{\sigma^2}$$

PDF of OSNR in independent Rayleigh fading

$$f(\gamma) = \frac{1}{(M-1)!\,\bar{\gamma}^{M_{\mathrm{r}}}} \gamma^{M_{\mathrm{r}}-1} \exp\left(-\frac{\gamma}{\bar{\gamma}}\right)$$

Channel capacity

$$C_{\mathrm{SIMO}}(\gamma) = \log_2\left(1 + \sum_{i=1}^{M_{\mathrm{r}}} \left|h_i\right|^2 \frac{P}{\sigma^2}\right)$$

Average channel capacity

$$\bar{C}_{\mathrm{SIMO}}(\gamma) = \int f(\gamma) C_{\mathrm{SIMO}}(\gamma) \mathrm{d}\gamma$$

MISO System

Received signal

$$y(t) = \mathbf{h}^T \mathbf{w}_{\mathrm{t}} s(t) + n(t)$$

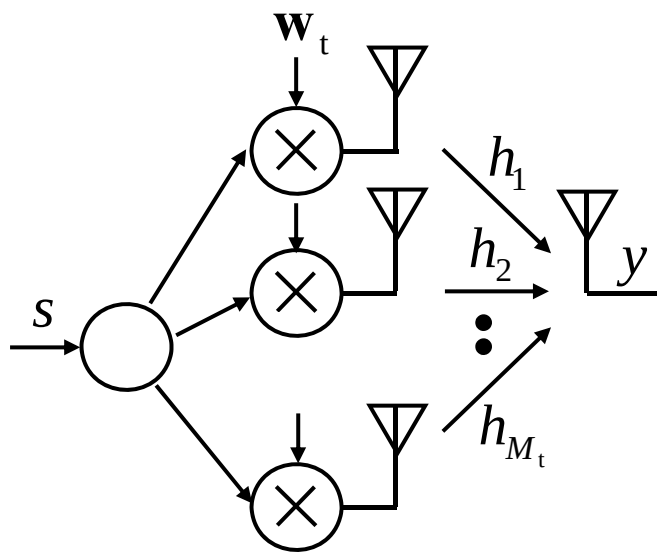

Output SNR

$$\gamma = \max_{\mathbf{w}_{\mathrm{t}}} \frac{\mathrm{E}\left[\left|\mathbf{h}^T \frac{\mathbf{w}_{\mathrm{t}}}{|\mathbf{w}_{\mathrm{t}}|} s\right|^2\right]}{\mathrm{E}[|n|^2]} = \sum_{i=1}^{M_{\mathrm{t}}} |h_i|^2 \frac{P}{\sigma^2}$$

PDF of OSNR in independent Rayleigh fading

$$f(\gamma) = \frac{1}{(M-1)!\bar{\gamma}^{M_{\mathrm{t}}}} \gamma^{M_{\mathrm{t}}-1} \exp\left(-\frac{\gamma}{\bar{\gamma}}\right)$$

Channel capacity

$$C_{\mathrm{MISO}}(\gamma) = \log_2\left(1 + \sum_{i=1}^{M_{\mathrm{t}}} |h_i|^2 \frac{P}{\sigma^2}\right)$$

Average channel capacity

$$\bar{C}_{\mathrm{MISO}}(\gamma) = \int f(\gamma) C_{\mathrm{MISO}}(\gamma) \mathrm{d}\gamma$$

SIMO/MISO Channel Cpacity

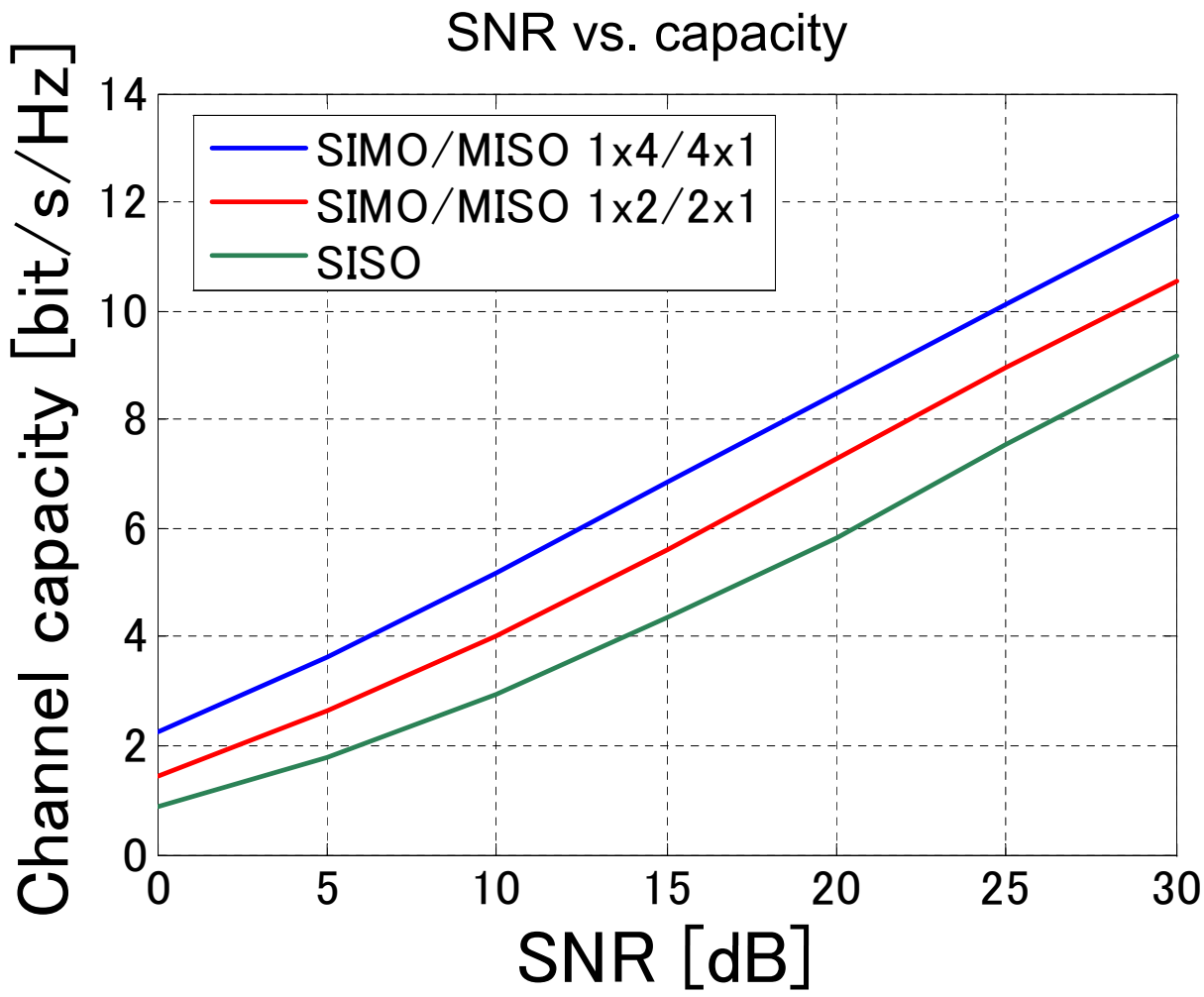

SIMO/MISO Channel Capacity

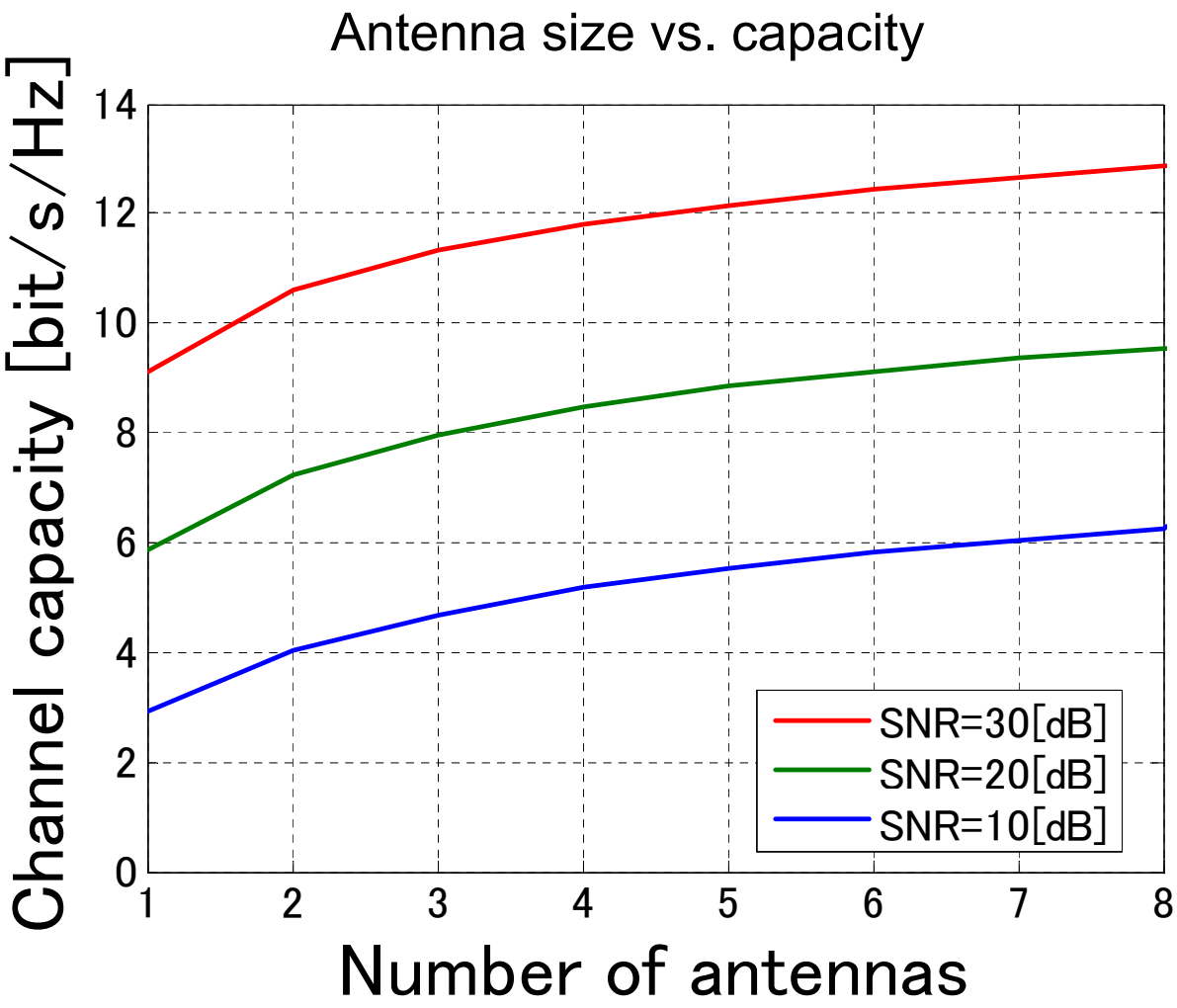

MIMO Communication System

– Multi-Input & Multi-Output (MIMO) at the same channel

– Utilization of rank $m = \min(M_t, M_r)$ effective channels
(ex. SISO → 1, SIMO → 1)

– Benefits of MIMO = increase of throughput & area coverage

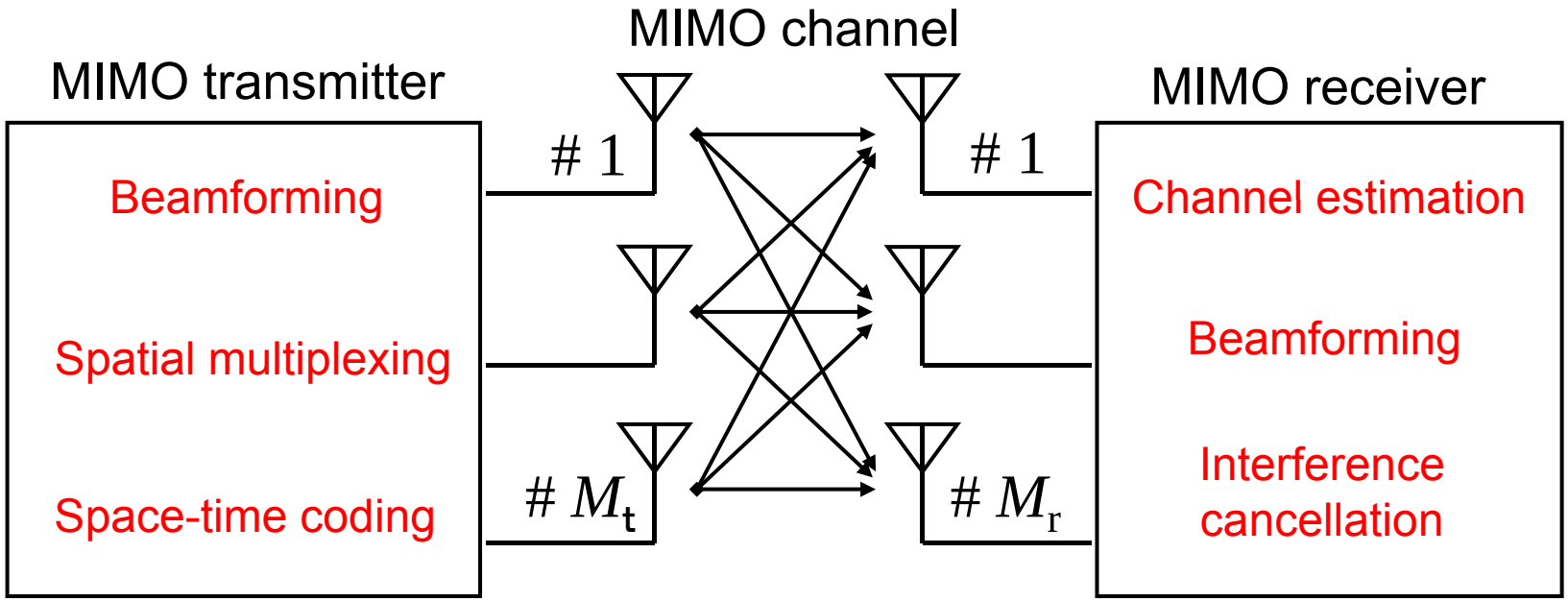

Signal Model for MIMO System

Received signal vector

Transmit signal vector

$$\mathbf{y}(t) = \mathbf{H}\mathbf{s}(t) + \mathbf{n}(t)$$

MIMO channel matrix

Noise vector

$$\begin{bmatrix} y_1 \\ \vdots \\ y_{M_\mathrm{r}} \end{bmatrix} = \begin{bmatrix} h_{11} & \cdots & h_{1M_\mathrm{t}} \\ \vdots & \ddots & \vdots \\ h_{M_\mathrm{r}1} & \cdots & h_{M_\mathrm{r}M_\mathrm{t}} \end{bmatrix} \begin{bmatrix} s_1 \\ \vdots \\ s_{M_\mathrm{t}} \end{bmatrix} + \begin{bmatrix} n_1 \\ \vdots \\ n_{M_\mathrm{r}} \end{bmatrix}$$

MIMO Diversity

Received signal vector

$$\mathbf{y}(t) = \mathbf{H}\mathbf{w}_{\mathrm{t}} s(t) + \mathbf{n}(t)$$

Output SNR

$$\gamma = \max_{\mathbf{w}_{\mathrm{r}}, \mathbf{w}_{\mathrm{t}}} \frac{\mathrm{E}[\left|\mathbf{w}_{\mathrm{r}}^{H} \mathbf{H}\mathbf{w}_{\mathrm{t}} s\right|^2]}{\mathrm{E}[\left|\mathbf{w}_{\mathrm{r}}^{H} \mathbf{n}\right|^2]}$$

$$= \frac{\left|\mathbf{u}^{H} \mathbf{H}\mathbf{v}\right|^2 P}{\sigma^2 \left|\mathbf{u}\right|^2} = \frac{\lambda P}{\sigma^2}$$

Channel capacity

$$C_{\mathrm{MD}}(\gamma) = \log_2\left(1 + \frac{\lambda P}{\sigma^2}\right)$$

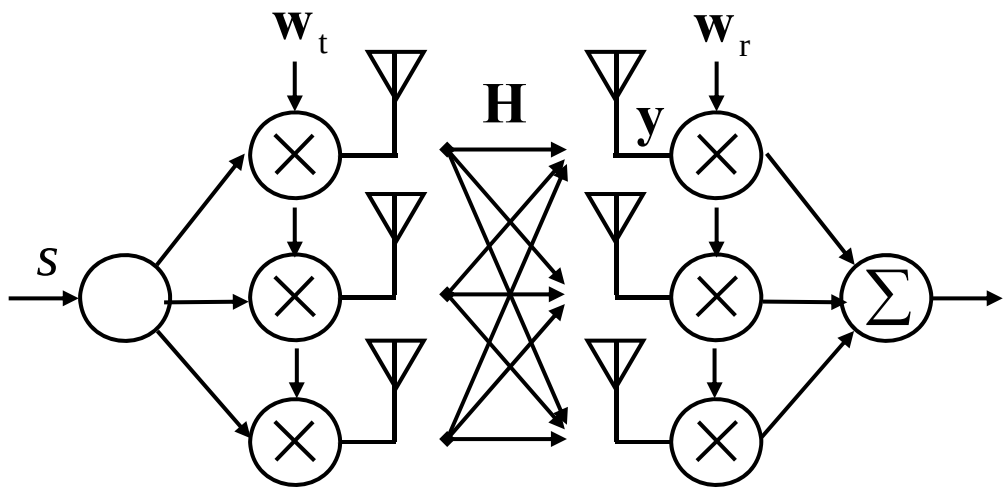

Maximum singular value

$$\max_{\mathbf{u},\mathbf{v}} \left|\mathbf{u}^{H} \mathbf{H}\mathbf{v}\right|^2 = \lambda$$

Spatial Multiplexing

Received signal vector

$$\mathbf{y}(t) = \sum_{i=1}^{M_t} \mathbf{h}_i \frac{s_i(t)}{\sqrt{M_t}} + \mathbf{n}(t)$$

Interference cancellation

$$\mathbf{w}_{ri} = \mathbf{H}_{\backslash i}^{\perp}$$

Output SNR

$$\gamma_i = \frac{\mathrm{E}[\left|\mathbf{w}_{ri}^H \mathbf{h}_i \frac{s_i(t)}{\sqrt{M_t}}\right|^2]}{\mathrm{E}[\left|\mathbf{w}_{ri}^H \mathbf{n}\right|^2]}$$

Channel capacity

$$C_{\mathrm{MD}}(\gamma) = \sum_{i=1}^{M_t} \log_2(1+\gamma_i)$$

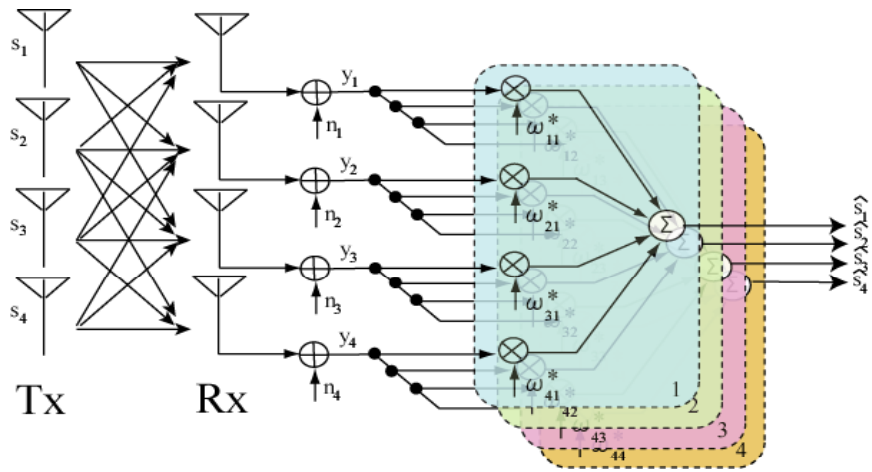

Null subspace interference cancellation

$$\mathbf{H}_{\backslash i} = \lfloor \mathbf{h}_1, \cdots, \mathbf{h}_{i-1}, \mathbf{h}_{i+1} \cdots, \mathbf{h}_{M_t} \rfloor$$

$$\mathbf{H}_{\backslash i}\mathbf{H}_{\backslash i}^H = \mathbf{E}\Lambda\mathbf{E}^H$$

$$\mathbf{E} = \lfloor \mathbf{e}_1, \cdots, \mathbf{e}_{M_t} \rfloor$$

$$\mathbf{H}_{\backslash i}^{\perp} = \mathbf{e}_{M_t}$$

SVD-MIMO

Singular value decomposition

$$\lambda_1 = \max_{\mathbf{u}_1, \mathbf{v}_1} \left| \mathbf{u}_1^H \mathbf{H} \mathbf{v}_1 \right|^2$$

$$\mathbf{H} = \sqrt{\lambda_1} \mathbf{u}_1 \mathbf{v}_1^H + \tilde{\mathbf{H}}$$

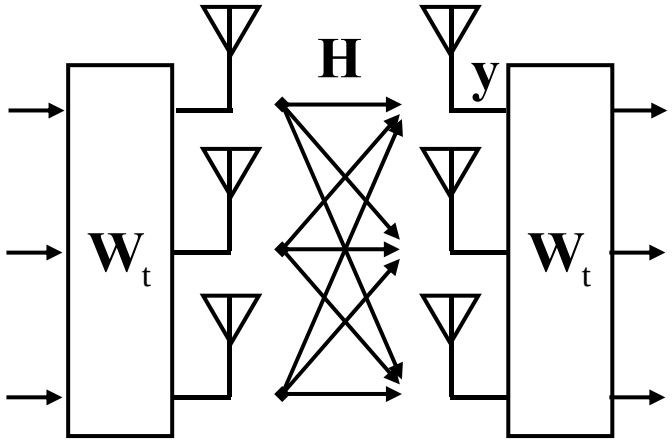

$$\mathbf{H} = \mathbf{U}\,\mathbf{\Sigma}\,\mathbf{V}^H = \sqrt{\lambda_1} \mathbf{u}_1 \mathbf{v}_1^H + \sqrt{\lambda_2} \mathbf{u}_2 \mathbf{v}_2^H + \cdots + \sqrt{\lambda_m} \mathbf{u}_m \mathbf{v}_m^H$$

Eigenmodes

$$\Sigma = \mathrm{diag}\left[\sqrt{\lambda_1}, \cdots, \sqrt{\lambda_m}\right] \qquad m = \min\left(M_{\mathrm{t}}, M_{\mathrm{r}}\right)$$

SVD-MIMO

$$\mathbf{y}(t) = \mathbf{W}_{\mathrm{r}}^H \mathbf{H} \mathbf{W}_{\mathrm{t}} \mathbf{s}(t) + \mathbf{W}_{\mathrm{r}}^H \mathbf{n}(t)$$

$$= \mathbf{\Sigma} \mathbf{s}(t) + \tilde{\mathbf{n}}(t) \qquad \text{if} \qquad \mathbf{W}_{\mathrm{t}} = \mathbf{V} \qquad \mathbf{W}_{\mathrm{r}} = \mathbf{U}$$

SVD-MIMO

Singular value decomposition

$$\mathbf{H} = \mathbf{U}\Sigma\mathbf{V}^H$$

$$\Sigma = \mathrm{diag}\left[\sqrt{\lambda_1}, \cdots, \sqrt{\lambda_m}\right]$$

MIMO channel capacity

$$C_{\mathrm{MIMO}}(\gamma) = \sum_{i=1}^{m} \log_2\left(1 + \frac{P}{\sigma^2 m}\lambda_i\right)$$

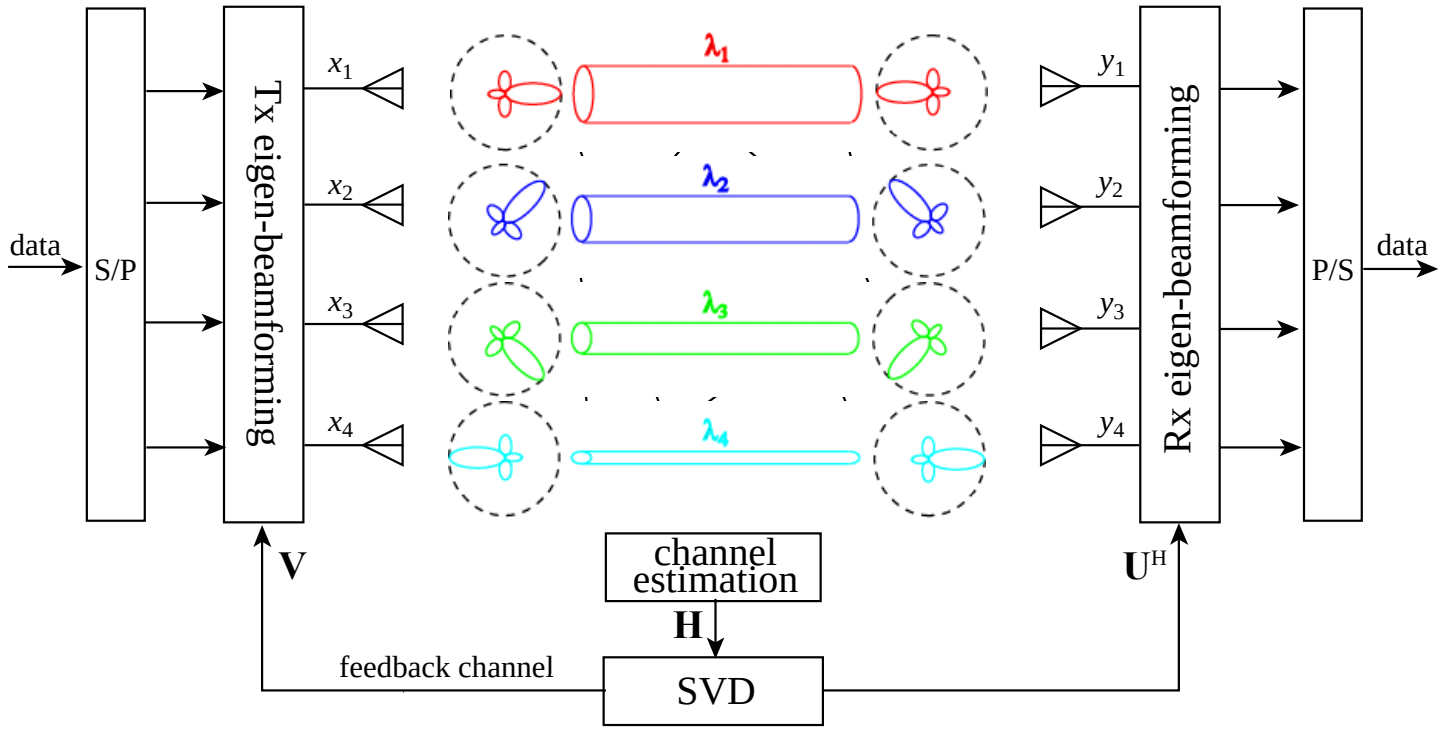

PDF of SVD-MIMO

PDF of singular values (Wishart distribution)

$$f(\lambda_1, \cdots, \lambda_m) = \frac{1}{K_{m,n}} \prod_{i=1}^{m} \exp(-\lambda_i) \lambda_i^{n-m} \prod_{i<j}^{m} (\lambda_i - \lambda_j)^2$$

$$K_{m,n} = \frac{\pi^{m(m-1)}}{\Gamma_m(n)\Gamma_m(m)} \qquad \begin{aligned} n &= \max(M_{\mathrm{t}}, M_{\mathrm{r}}) \\ m &= \min(M_{\mathrm{t}}, M_{\mathrm{r}}) \end{aligned}$$

Marginal probability

$$f(\lambda_1) = \int \cdots \int f(\lambda_1, \cdots, \lambda_m) d\lambda_2 \cdots d\lambda_m$$

PDF of SVD-MIMO (Example)

2x2 MIMO

$$M_{\mathrm{t}} = 2 \qquad M_{\mathrm{r}} = 2$$

Joint distribution (Wishart distribution)

$$f(\lambda_1, \lambda_2) = e^{-\lambda_1 - \lambda_2} \left(\lambda_1 - \lambda_2\right)^2$$

Marginal probability

$$f(\lambda_1) = -2e^{-2\lambda_1} + e^{-\lambda_1}\left(2 - 2\lambda_1 + \lambda_1^2\right) \longrightarrow \mathrm{E}\left[\lambda_1\right] = 3.5$$

$$f(\lambda_2) = 2e^{-2\lambda_2} \longrightarrow \mathrm{E}\left[\lambda_2\right] = 0.5$$

Cumulative probability

$$\tilde{f}\left(\tilde{\lambda}_1\right) = \int_0^{\tilde{\lambda}_1} f(\lambda_1)\mathrm{d}\lambda_1 = 1 - e^{-\tilde{\lambda}_1}\left(\tilde{\lambda}_1^{\,2} + 2\right) + e^{-2\tilde{\lambda}_1} \approx \tilde{\lambda}_1^{\,4} \big/ 12 + \cdots$$

$$\tilde{f}\left(\tilde{\lambda}_2\right) = \int_0^{\tilde{\lambda}_2} f(\lambda_2)\mathrm{d}\lambda_2 = 1 - e^{-2\tilde{\lambda}_2} \approx 2\tilde{\lambda}_2 - 2\tilde{\lambda}_2^{\,2} + \cdots$$

CDF of SVD-MIMO

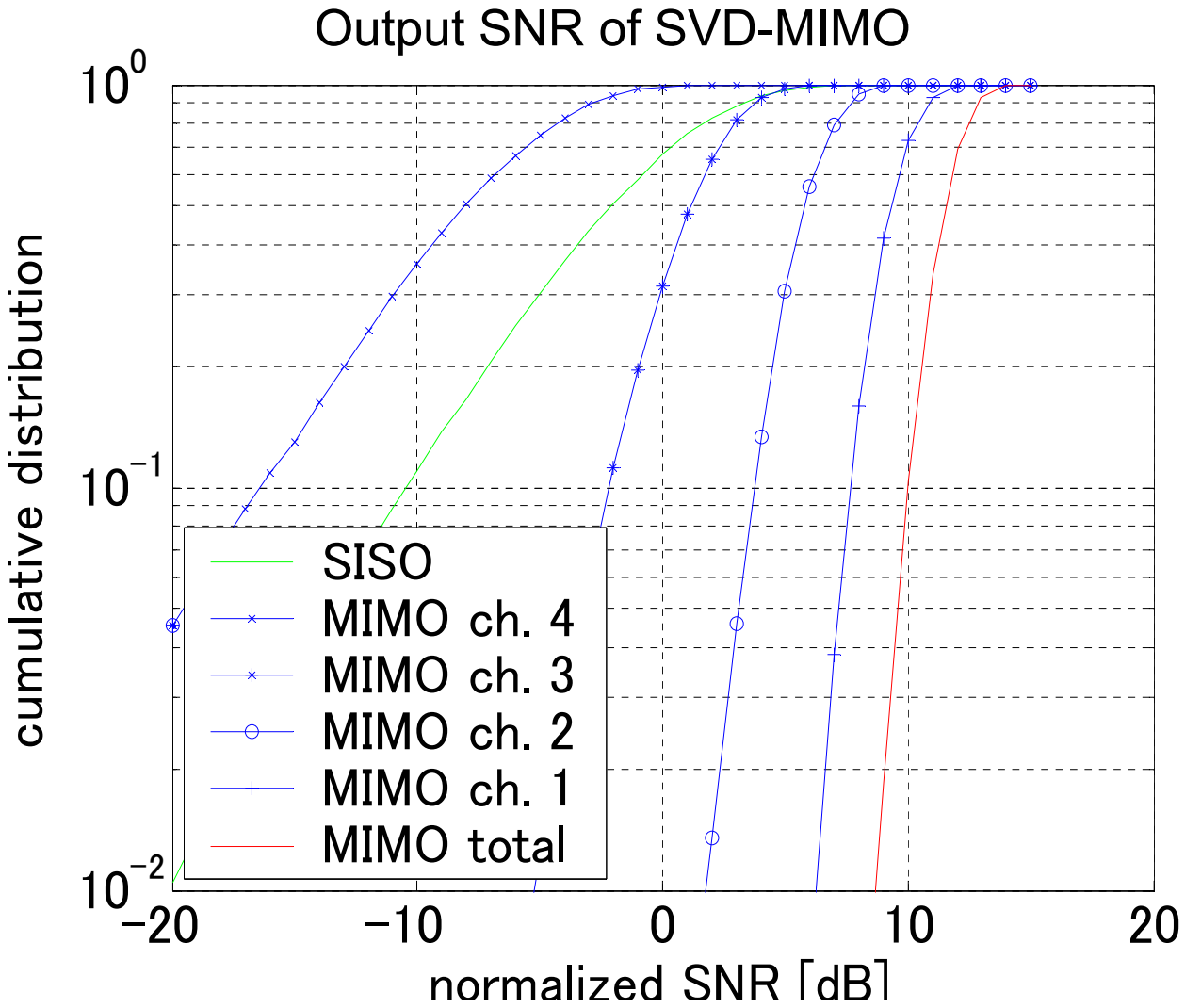

MIMO Channel Capacity

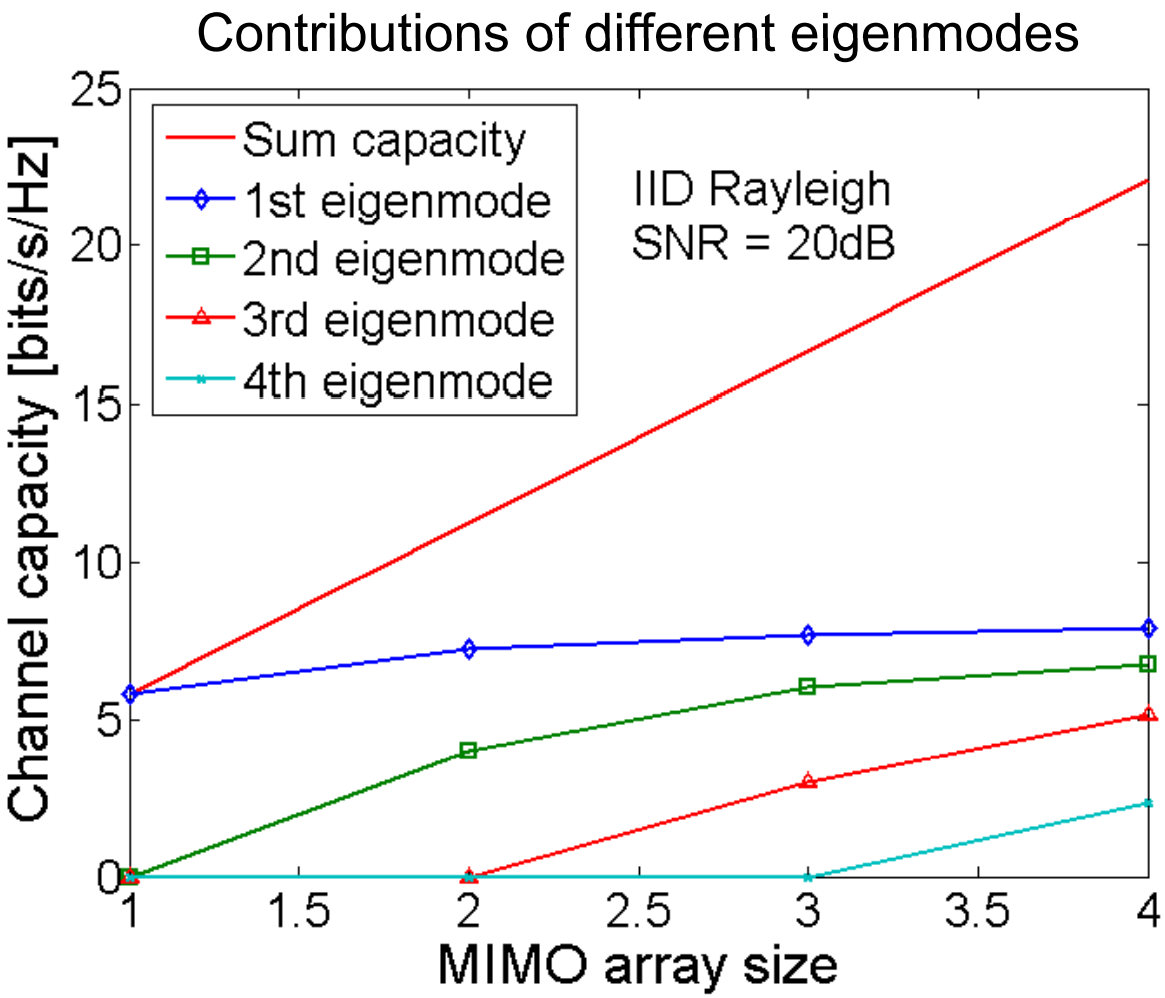

MIMO Channel Capacity

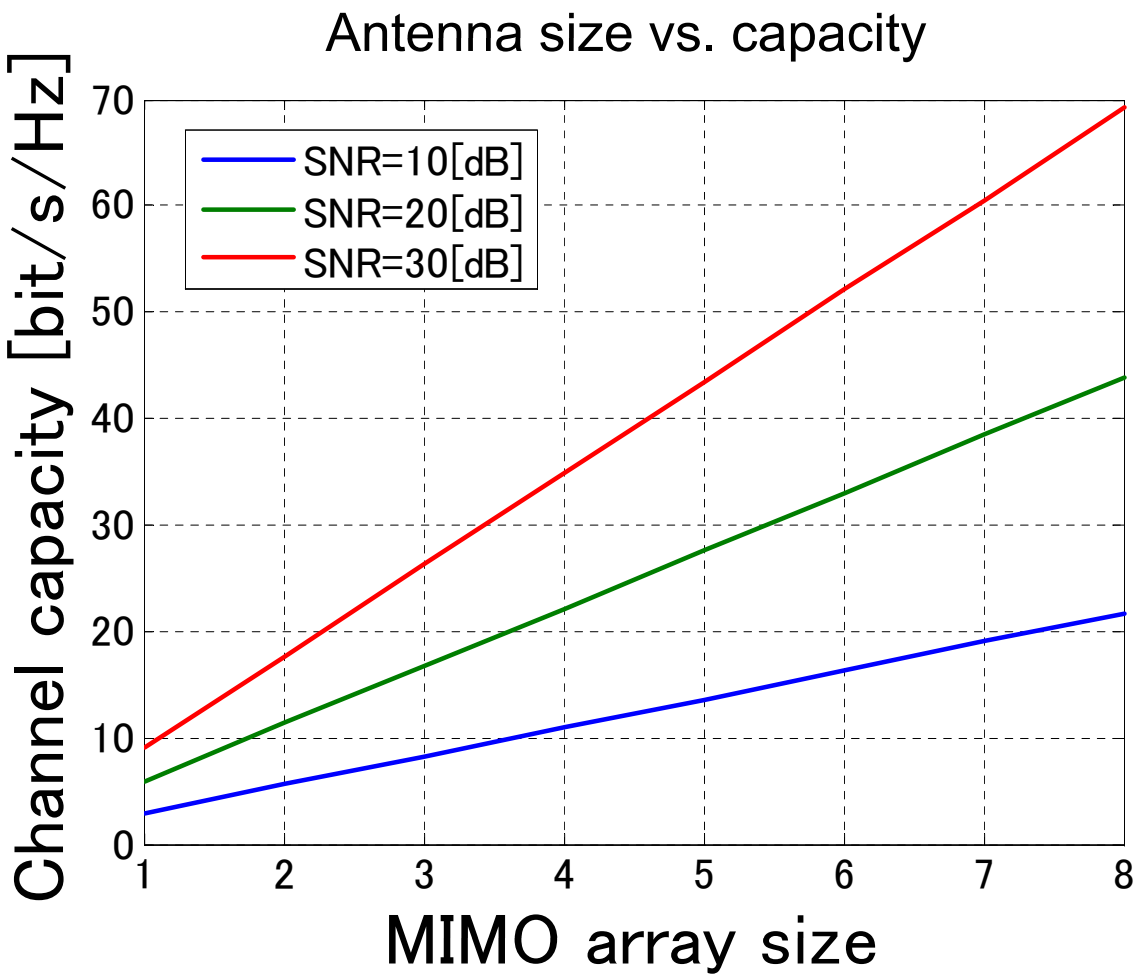

MIMO Channel Capacity

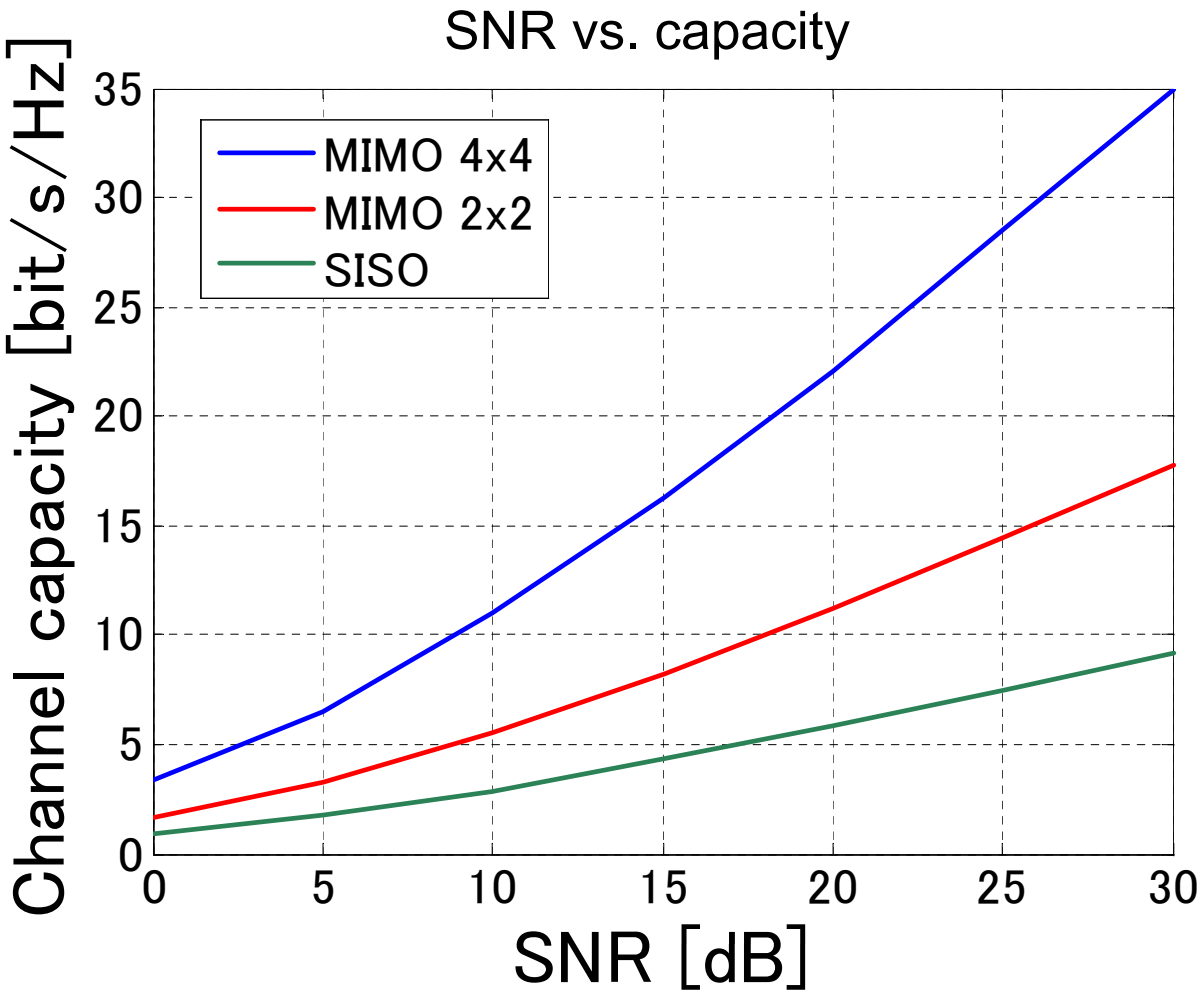

Transmit Power Optimization

Cost function

$$C_{\mathrm{MISO}}(\gamma) = \sum_{i=1}^{m} \log_2\left(1 + \frac{P_i \lambda_i}{\sigma^2}\right)$$

subject to $P = \sum_{i=1}^{m} P_i$

Water filling

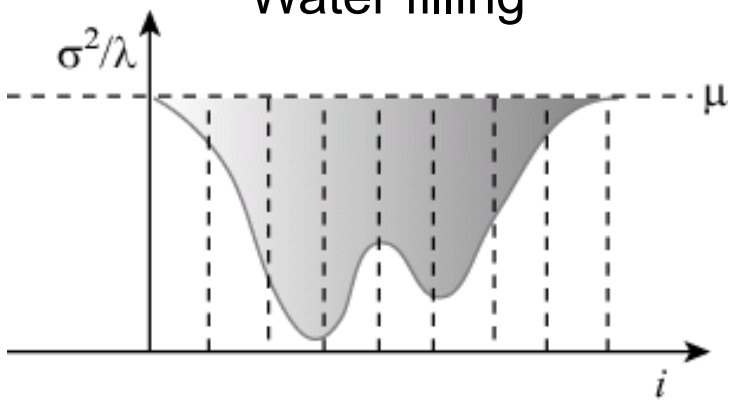

Method of Lagrange multipliers

$$J = \sum_{i=1}^{m} \log_2\left(1 + \frac{P_i \lambda_i}{\sigma^2}\right) + \delta\left(P - \sum_{i=1}^{m} P_i\right)$$

$$\frac{\partial J}{\partial P_i} = 0 \longrightarrow P_i + \sigma^2 / \lambda_i = \log_2 e / \delta$$

Optimal MIMO channel capacity

$$P_i = \left[\mu - \frac{\sigma^2}{\lambda_i}\right]^+ \longrightarrow C_{\mathrm{WF}} = \sum_{i=1}^{m} \left[\log_2\left(\frac{\mu \lambda_i}{\sigma^2}\right)\right]^+$$

Optimal MIMO Channel Capacity

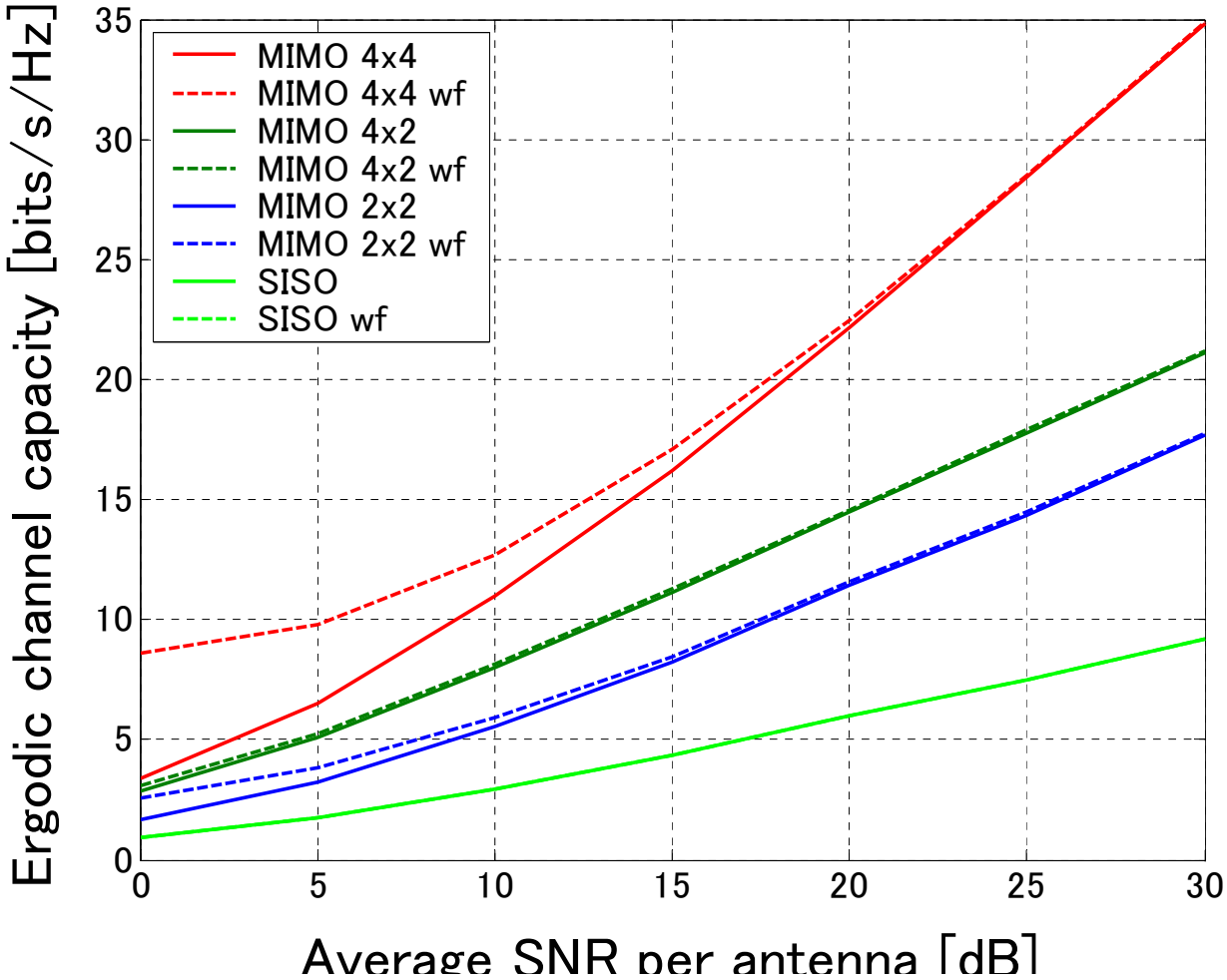

Measurement System

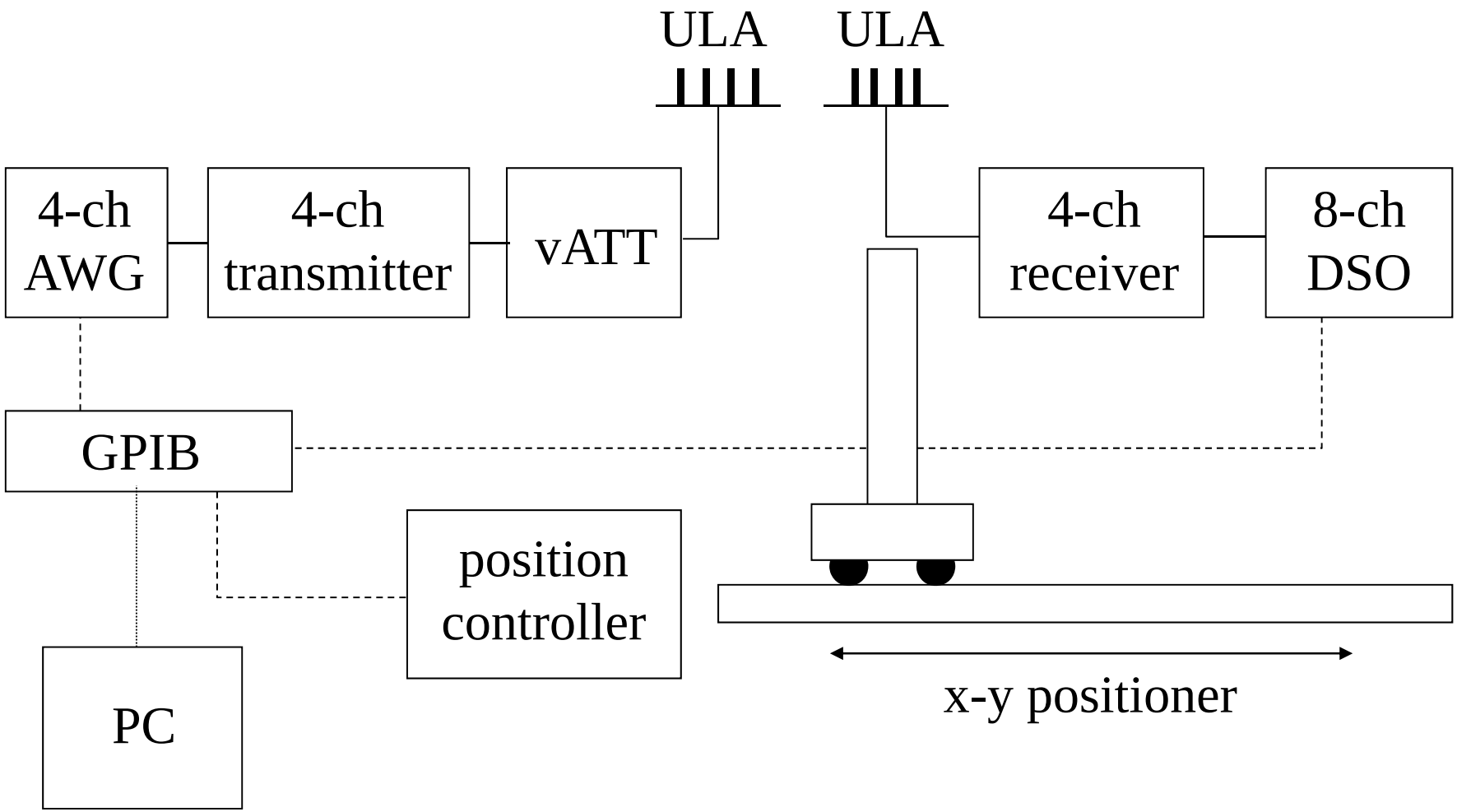

Photos of Measurement System

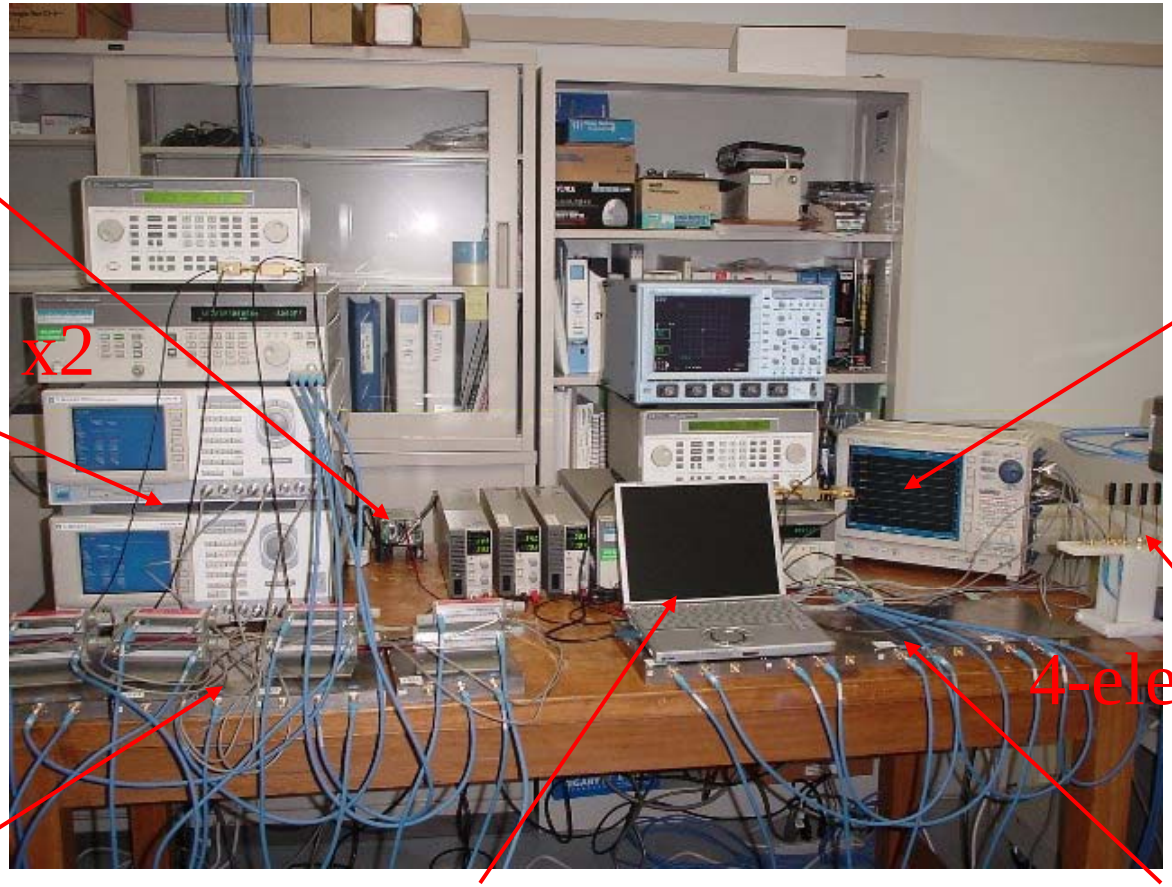

Process of Measurement

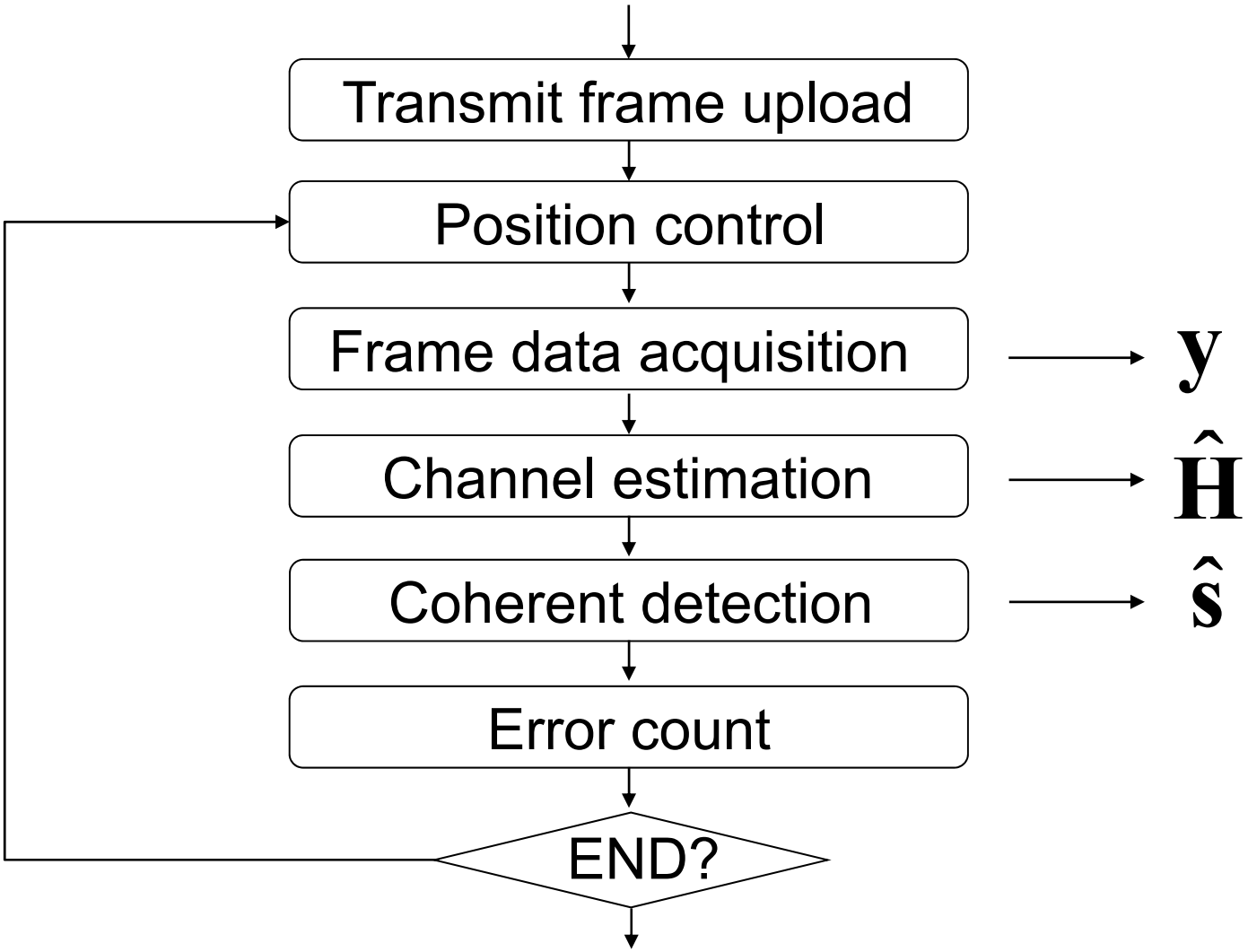

Measurement Setup

Center freq.	5.2 [GHz]
Array type	0.5λ spacing 4-element sleeve array
Tx. power	0 [dBm/channel] → SNR = 25 [dB]
Bandwidth	187.5 [kHz] → 125 [ksps] α=0.5
Modulation	BPSK, QPSK, 16QAM
Frame	512 (31：training、481：data)
Meas. points	256 points (2×2[cm^2] step in 30×30 [cm^2])

Measurement Environment

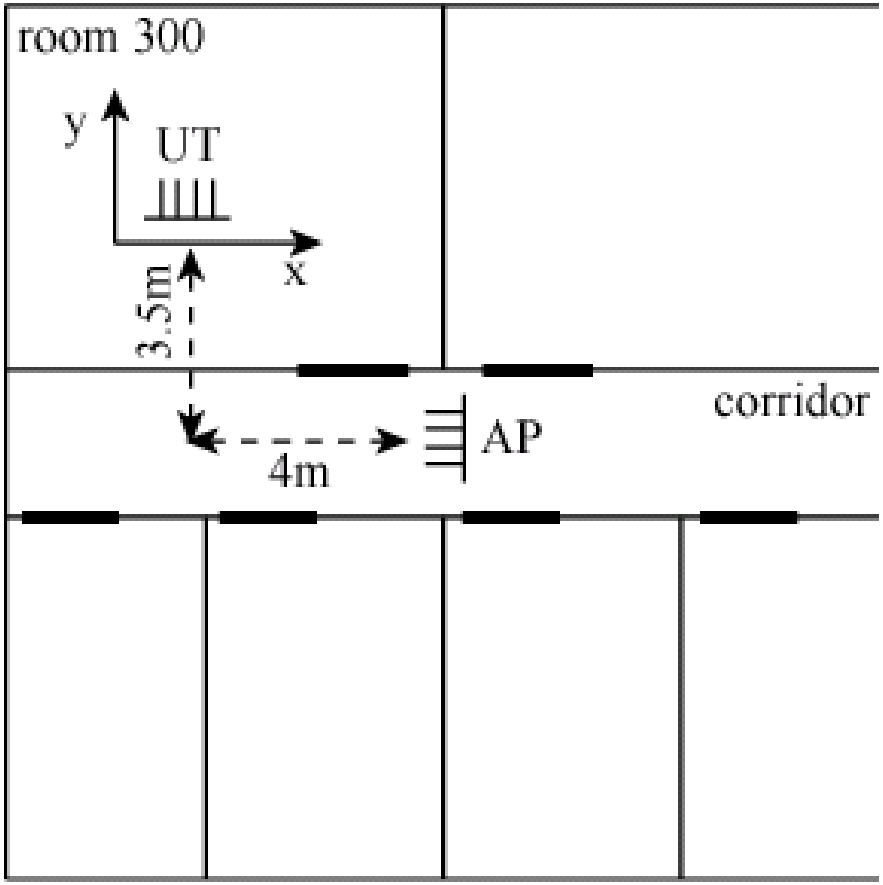

Transmit Array Antenna (AP)

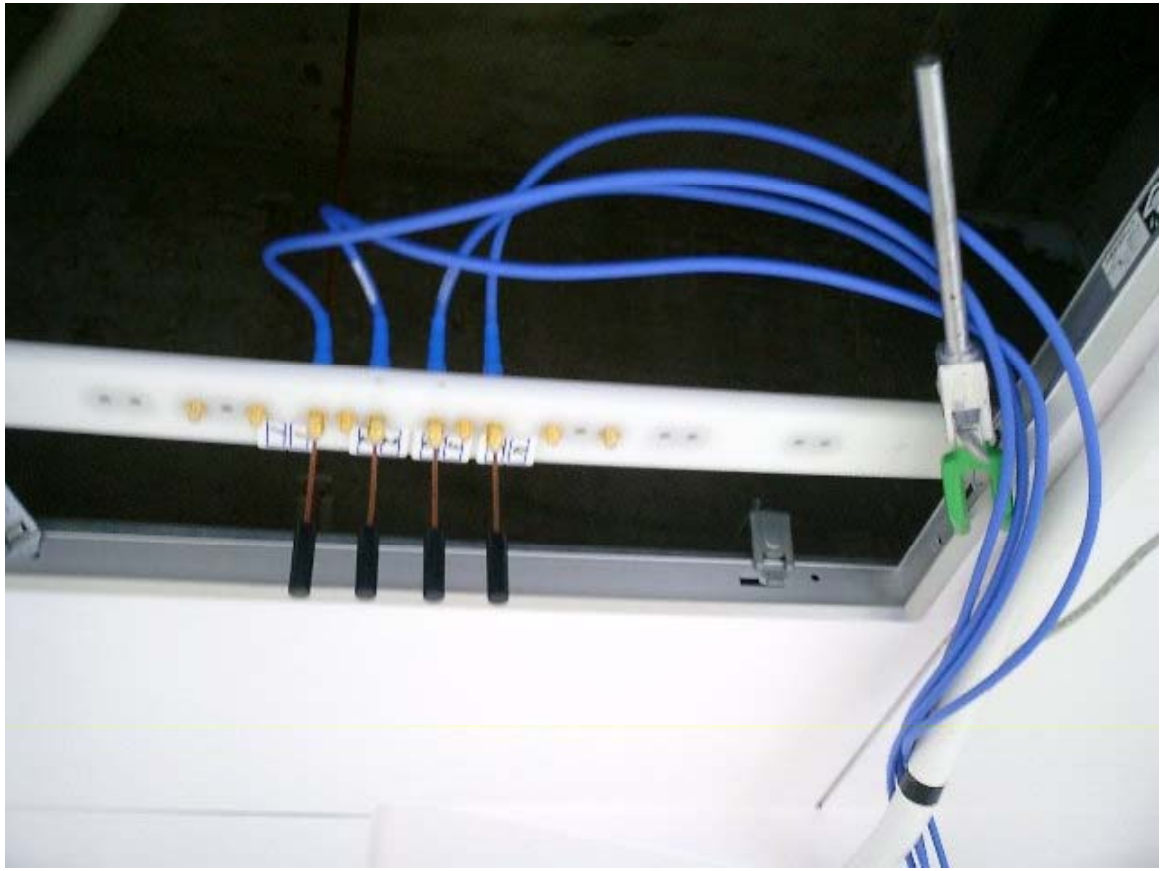

Receive Array Antenna (UT)

RF Transceiver

RF IN

RF OUT

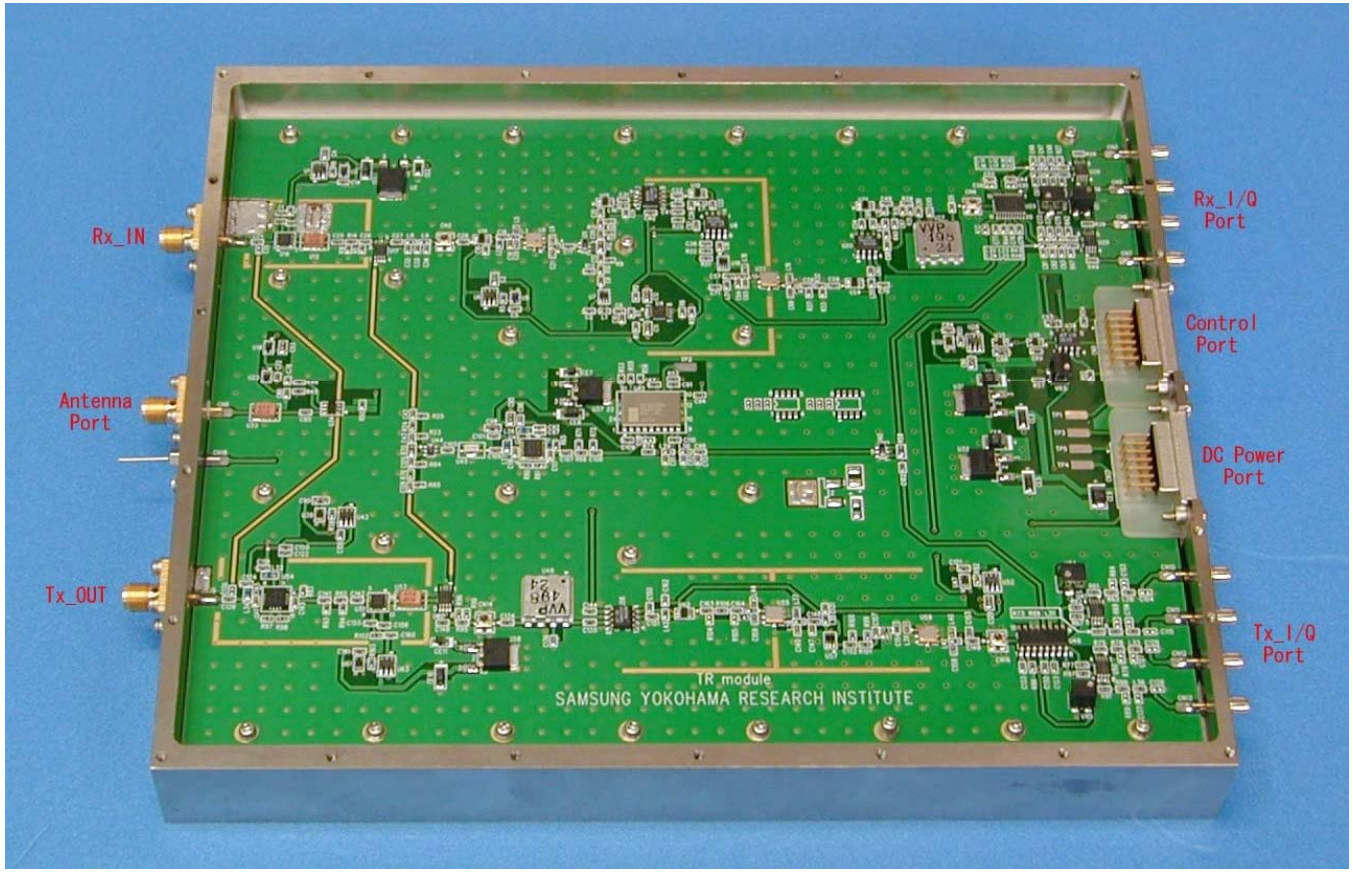

BB OUT

BB IN

Donation from Samsung Yokohama Institute of Technology

Received Signal of 2x2 MIMO with QPSK Signaling

Received signal

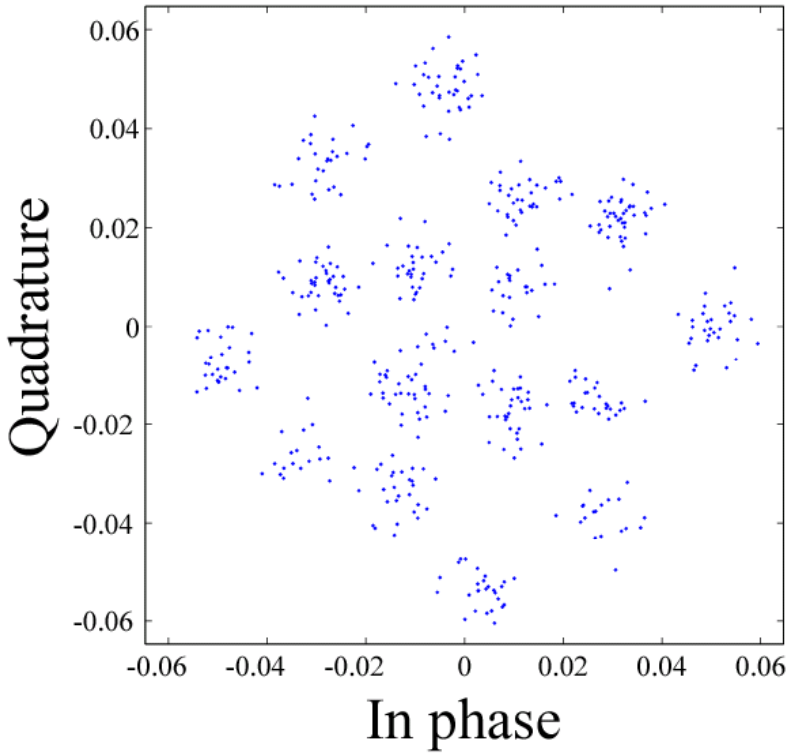

Interference cancellation

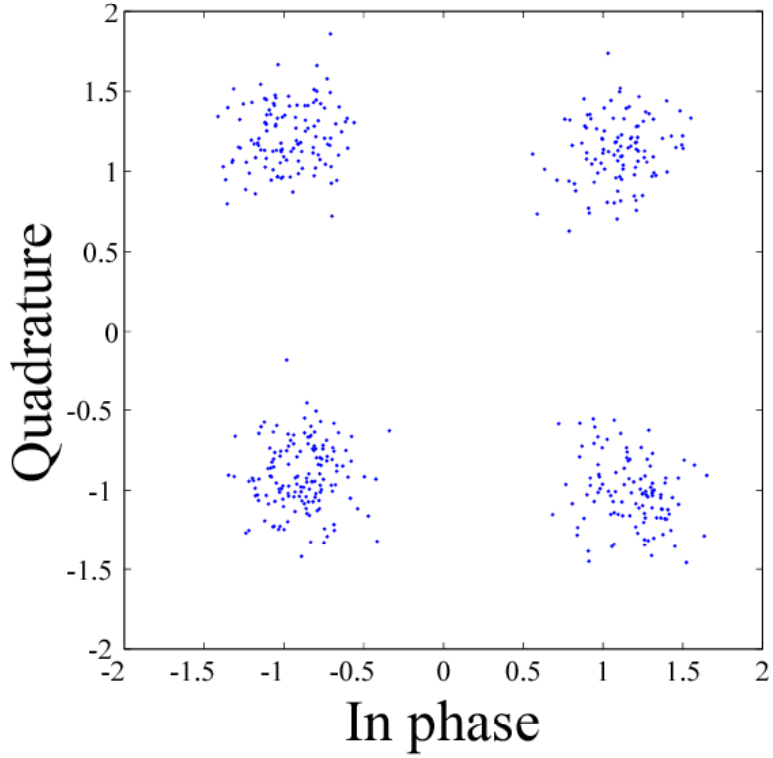

Distribution of Channel Capacity

SISO @ SNR=10[dB]

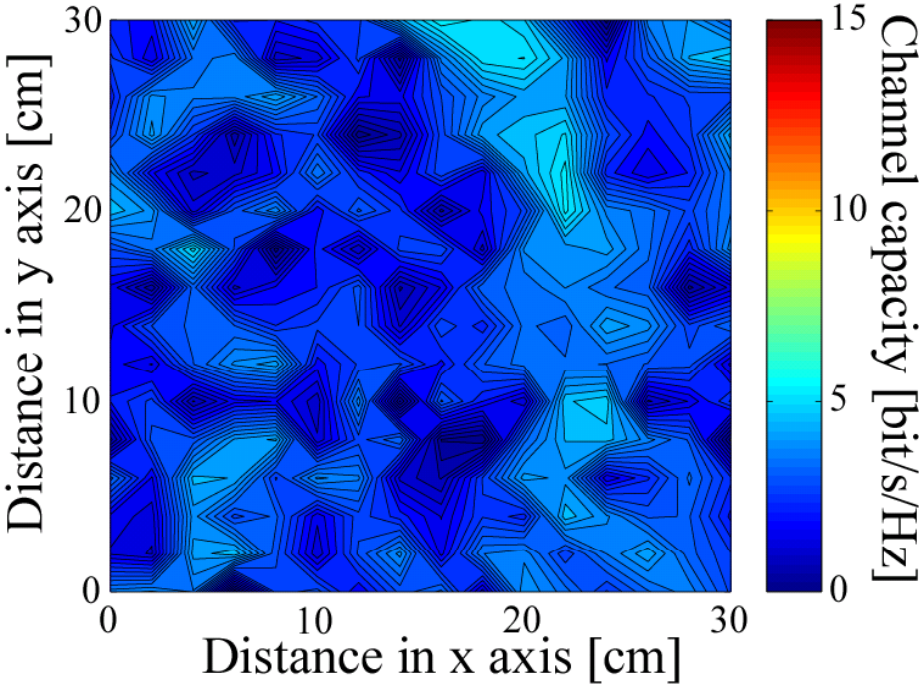

MIMO @ SNR=10[dB]

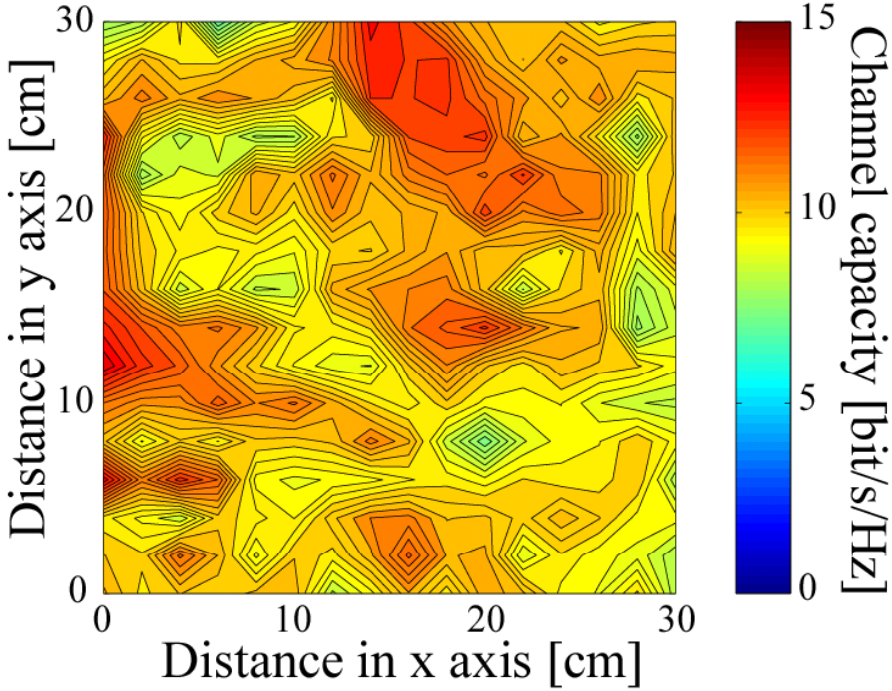

CDF of Channel Capacity

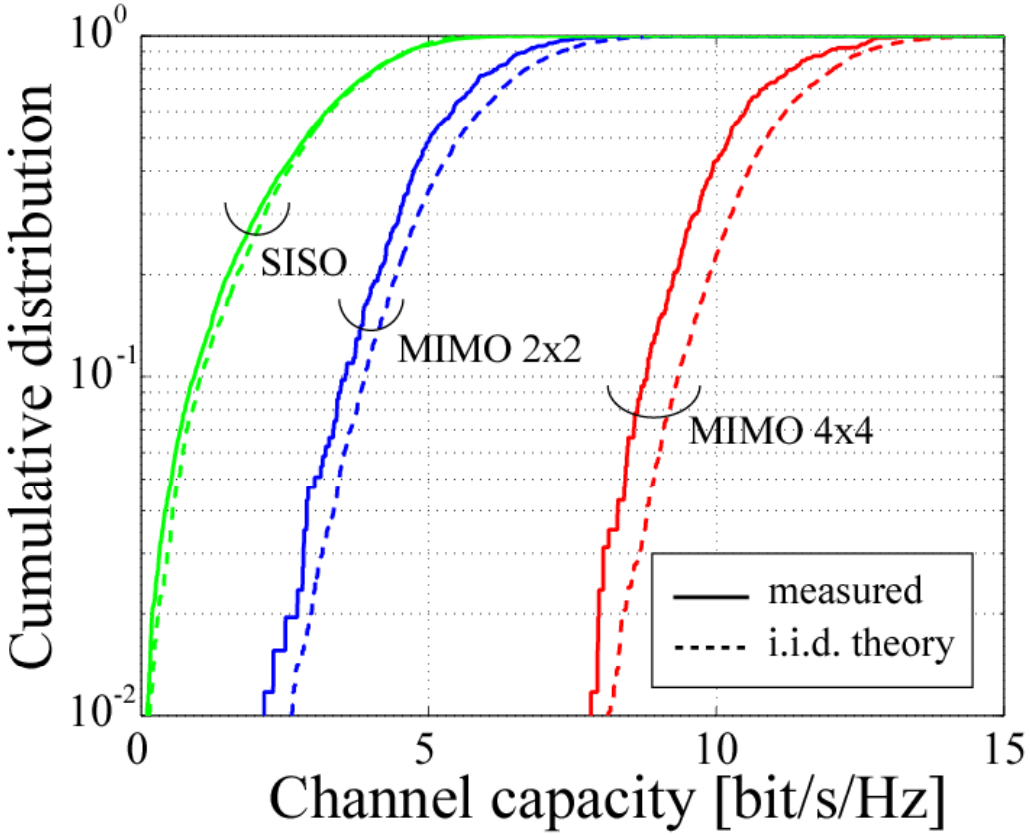

Dependency on MIMO Array Size

Channel capacity increases linearly w.r.t. array size in real environment

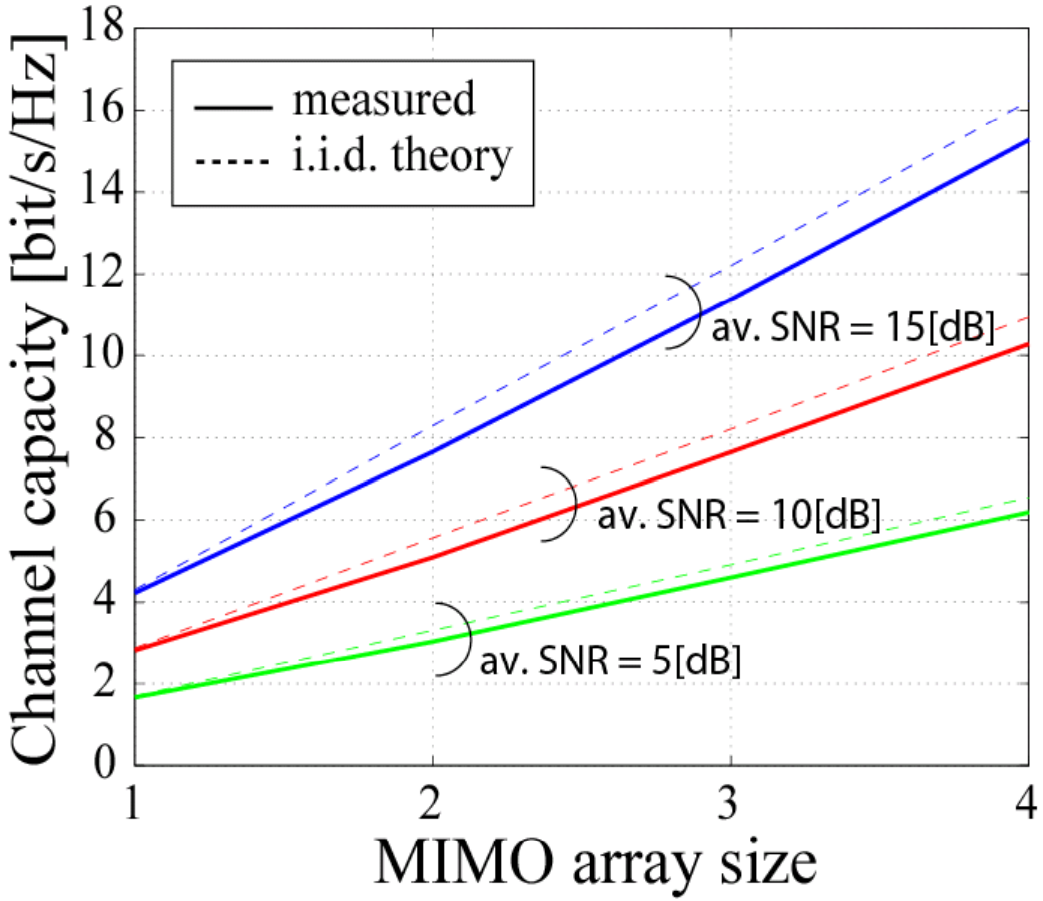

Summary

- MIMO channel capacity
  - Transmit & receive diversity to enhance reliability
  - Multi-stream spatial multiplexing to enhance spectral efficiency
  - SVD-MIMO & water filling power control achieves best performance

MIMO channel capacity increases linearly with respect to the number of antenna elements in IID fading environment

How about in realistic propagation environment?

Double directional spatial channel model