2010 2nd semester
Wireless Commun. Eng. Ⅱ

#4: Array Signal Processing

Kei Sakaguchi
<sakaguchi@mobile.ee.titech.ac.jp>

Nov. 10, 2010

Schedule (1st half)

	Date	Text	Contents
#1	Oct. 6	A-1, B-1	Introduction
#2	Oct. 13	B-5, B-6	Fundamentals of wireless commun.
#3	Oct. 20	B-12	OFDM for wireless broadband
#4	Nov. 10	B-7	Array signal processing
#5	Nov. 17	A-3, B-10	MIMO channel capacity
#6	Nov. 24	B-2, 3	Spatial channel model

Agenda

- Aim of today

  Derive SNR and BER performance of
  maximal ratio diversity combining

- Contents

  - Plane wave signal model
    - Beamforming & interference cancellation
  - Multi-path signal model
    - Diversity combining
    - Spatial correlation & its effect

Warming Up

Question

Illustrate eigen-vectors of correlation matrix $\mathbf{R} = \mathbf{H}\mathbf{H}^H$

(A) $\mathbf{H} = [\mathbf{h}_1] \in C^{3\times 1}$

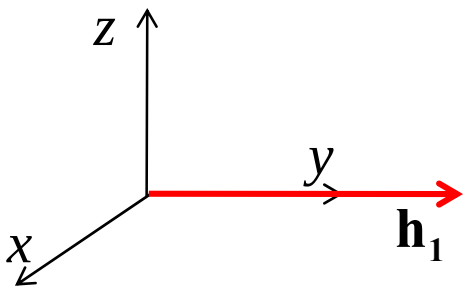

(B) $\mathbf{H} = [\mathbf{h}_1 \quad \mathbf{h}_2] \in C^{3\times 2}$

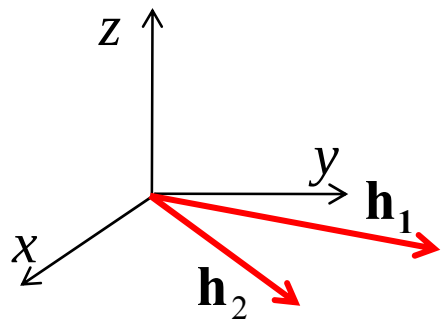

Eigen-value decomposition

Channel matrix: $\mathbf{H}$

Correlation matrix: $\mathbf{R} = \mathbf{H}\mathbf{H}^H$

Eigen-decomposition: $\mathbf{R} = \mathbf{E}\,\mathbf{\Lambda}\,\mathbf{E}^H$

Eigen vectors: $\mathbf{E} = [\mathbf{e}_1 \quad \mathbf{e}_2 \quad \mathbf{e}_3]$

Eigen values: $\mathbf{\Lambda} = \begin{bmatrix} \lambda_1 & 0 & 0 \\ 0 & \lambda_2 & 0 \\ 0 & 0 & \lambda_3 \end{bmatrix}$

Classification of Array Processing

- Static or Mobile corresponds to Fixed or Adaptive
- RF control or BB control
- Beamforming, diversity, or Interference cancellation
- Average SNR, outage SNR, or SIR

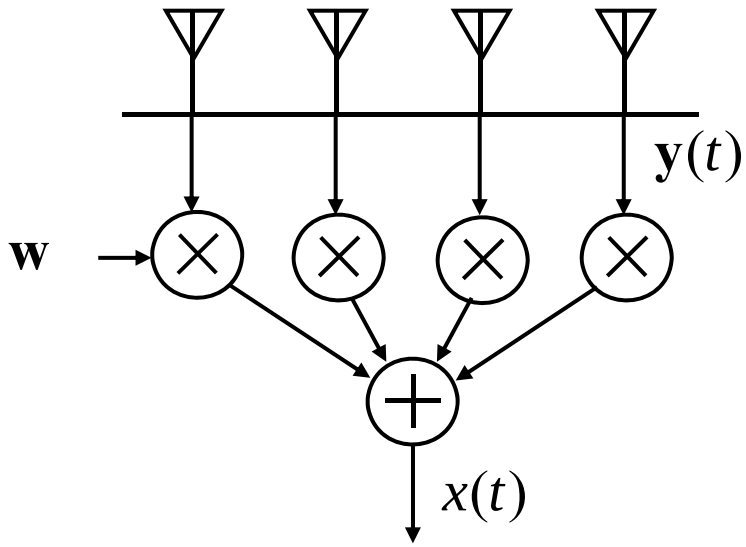

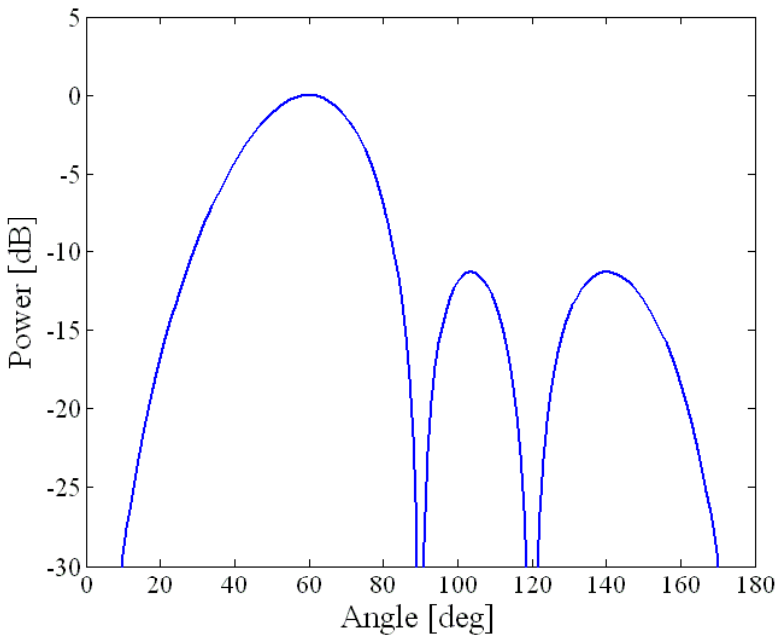

Plane Wave Signal Model

Plane wave signal model

$$\mathbf{y}(t) = \mathbf{h}(\theta)s(t) + \mathbf{n}(t)$$

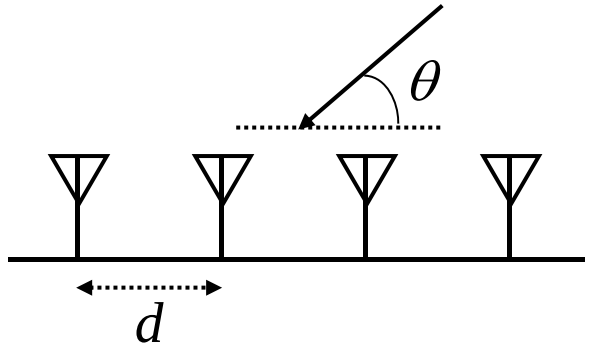

Channel response

$$\mathbf{h}(\theta) = \beta d(\theta)\mathbf{a}(\theta)$$

Array manifold

$$\mathbf{a}(\theta) = \left[1, e^{jkd\cos\theta}, e^{jk2d\cos\theta}, \cdots, e^{jk(M-1)d\cos\theta}\right] \qquad k = \frac{2\pi}{\lambda}$$

Antenna element directivity

$$d(\theta) \cong 1$$ — Omni-directional pattern

Beamforming

Received signal

$$\mathbf{y}(t) = \beta \mathbf{a}(\theta) s(t) + \mathbf{n}(t)$$

Array combining

$$x(t) = \mathbf{w}^H \mathbf{y}(t)$$

Retro directive beamforming

$$\mathbf{w} = \beta \mathbf{a}(\theta)$$

$$x(t) = M\beta^2 s(t) + \sum_{i=1}^{M} \beta n_i(t)$$

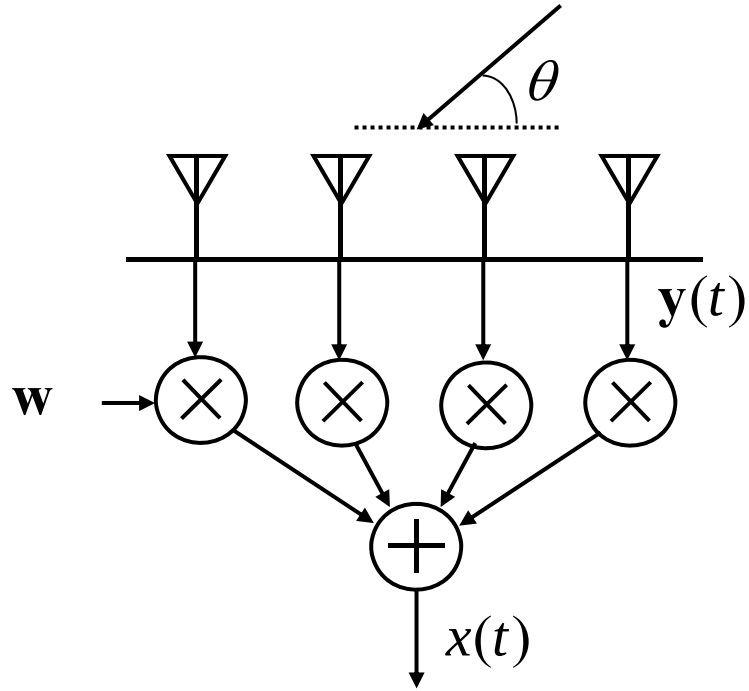

Output SNR

Array gain

$$\gamma_o = \frac{\mathrm{E}[|s_o(t)|^2]}{\mathrm{E}[|n_o(t)|^2]} = \frac{M^2\beta^4 \mathrm{E}[|s(t)|^2]}{\beta^2 \sum_{i=1}^{M} \mathrm{E}[|n_i(t)|^2]} = \frac{M^2\beta^2 P}{M\sigma^2} = \frac{M\beta^2 P}{\sigma^2}$$

Beamforming

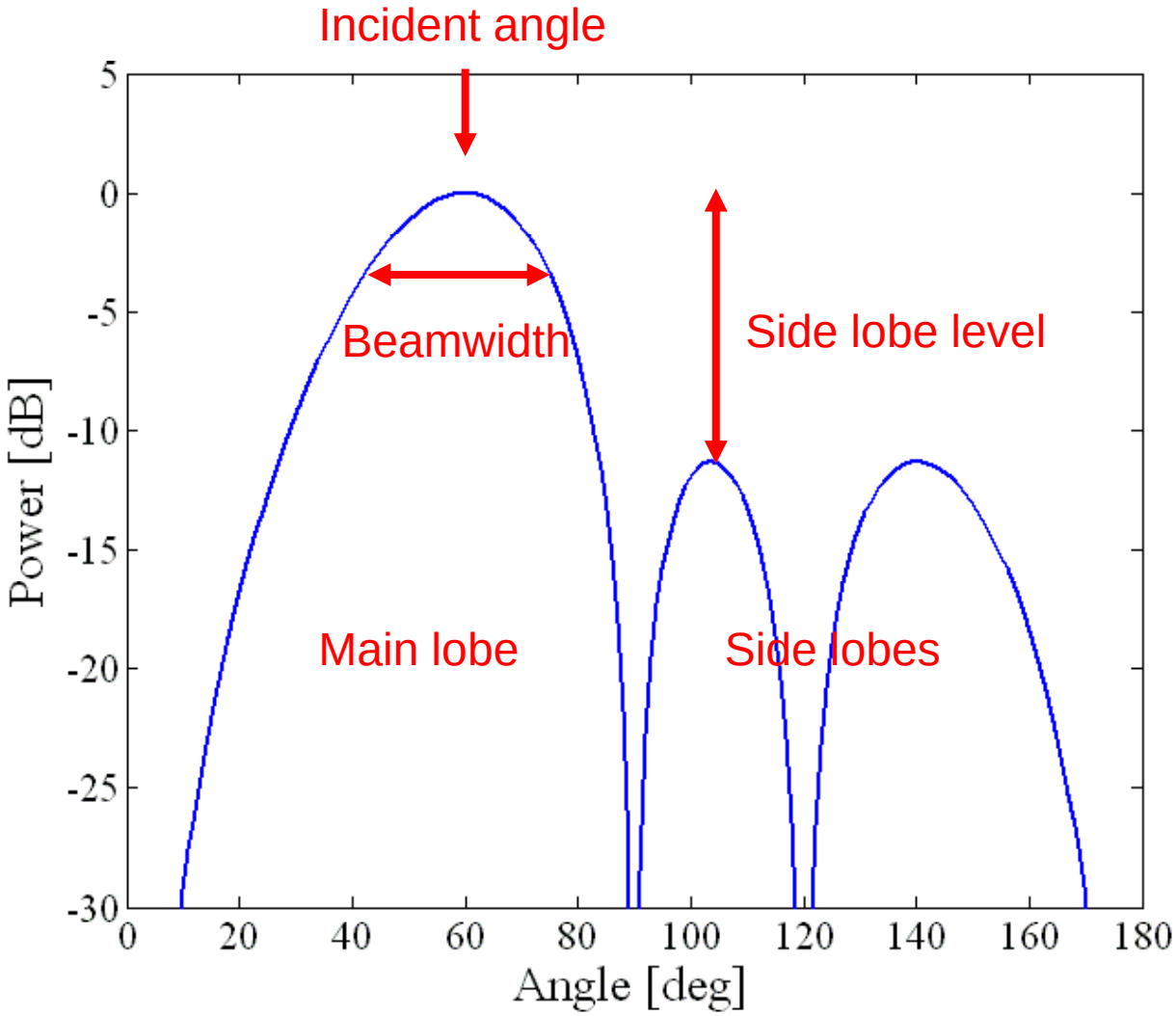

Interference Cancellation

Subspace decomposition

$$\mathbf{R} = \mathbf{h}\mathbf{h}^H = \mathbf{E}\Lambda\mathbf{E}^H$$

$$\Lambda = \mathrm{diag}[\lambda_1, \lambda_2, \lambda_3, \lambda_4]$$

$$\lambda_1 > \lambda_2 = \lambda_3 = \lambda_4 = 0$$

$$\mathbf{E} = [\underbrace{\mathbf{e}_1}_{\text{Signal space}}, \underbrace{\mathbf{e}_2, \mathbf{e}_3, \mathbf{e}_4}_{\text{Null space}}]$$

$$\mathbf{e}_i^H \mathbf{R} \mathbf{e}_i = 0 \quad (i = 2,3,4)$$

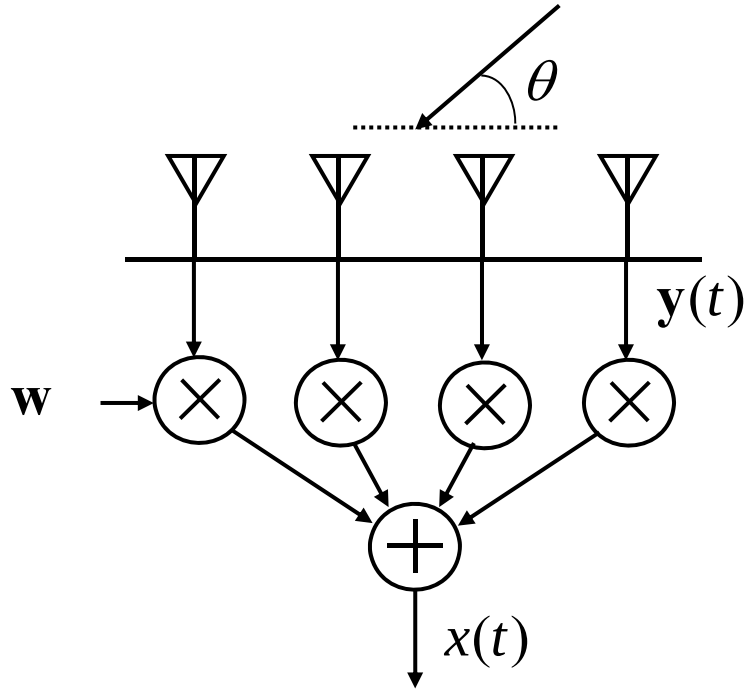

Interference cancellation

$$x(t) = \mathbf{w}^H \mathbf{y}(t)$$

$$\mathbf{w} = \mathbf{e}_i \quad (i = 2,3,4)$$

Output SNR

$$\gamma_o = \frac{\mathbf{w}^H \mathbf{h}\mathbf{h}^H \mathbf{w} P}{\mathbf{w}^H \mathbf{w} \sigma^2} = \frac{0}{\sigma^2}$$

Interference cancellation

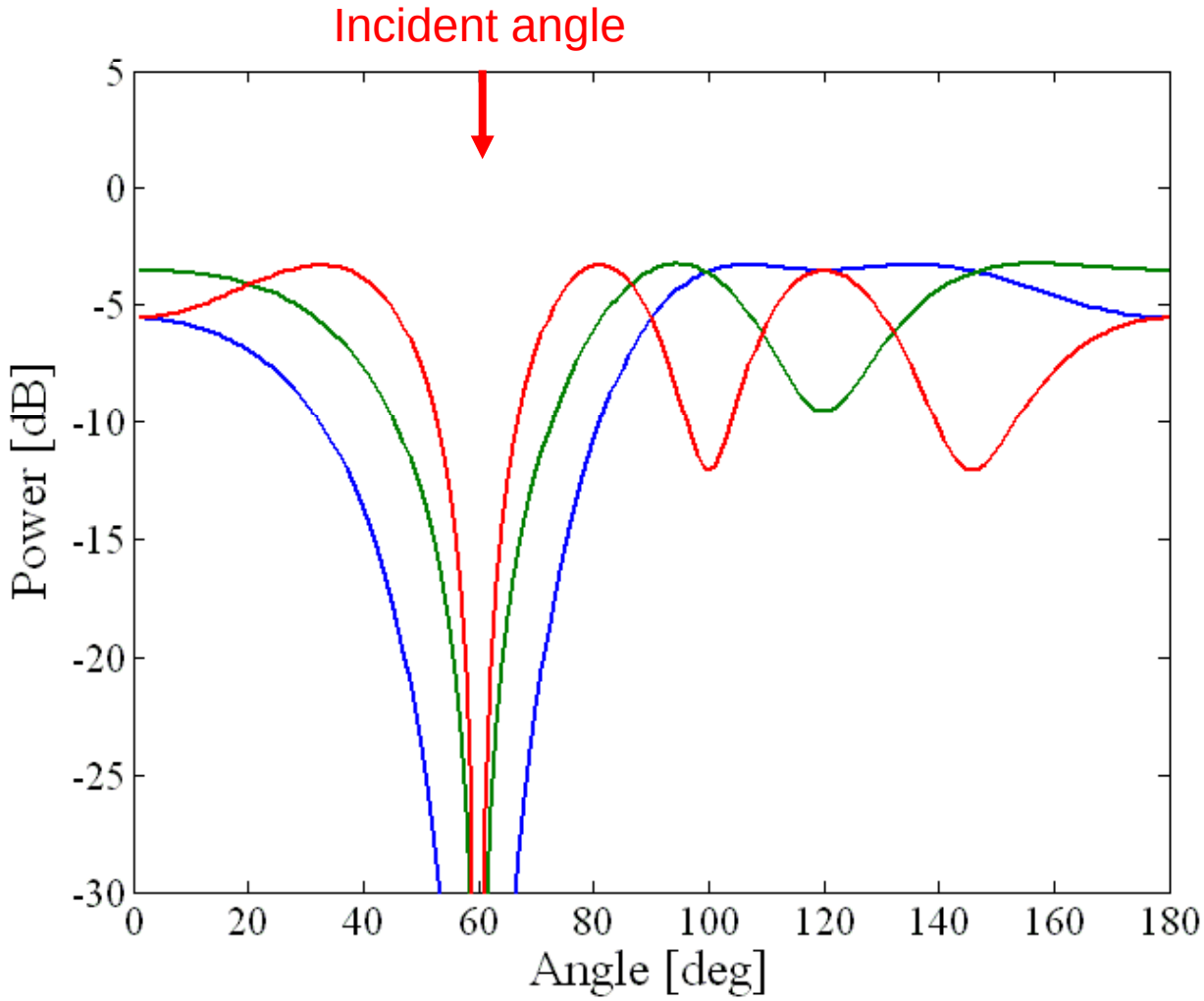

Multi-path Signal Model

Multi-path signal model

$$\mathbf{y}(t) = \mathbf{h}s(t) + \mathbf{n}(t)$$

$$\mathbf{h}(\theta) = \sum_{l=1}^{L} \mathbf{h}(\theta_l)$$

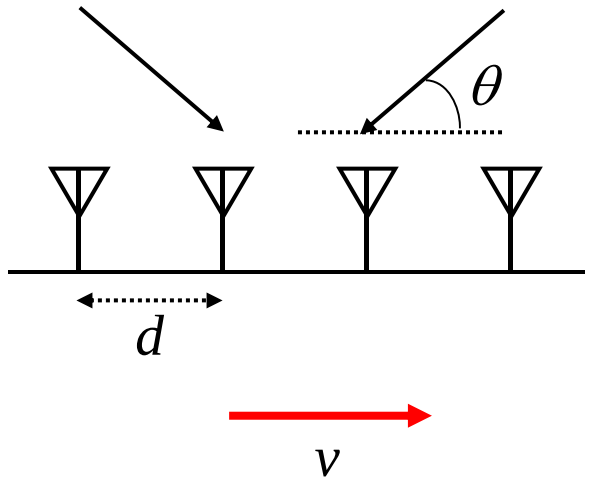

Time variant channel response

$$\mathbf{h}(\theta_l) = \beta_l(t) d(\theta_l) \mathbf{a}(\theta_l)$$

$$\beta_l(t) = \beta_l e^{jkvt\cos\theta_l}$$

Diversity Combining

Multi-path signal model

$$\mathbf{y}(t) = \mathbf{h}s(t) + \mathbf{n}(t)$$

Maximum ratio diversity combining

$$x(t) = \mathbf{w}^H \mathbf{y}(t)$$

$$\mathbf{w} = \mathbf{h}$$

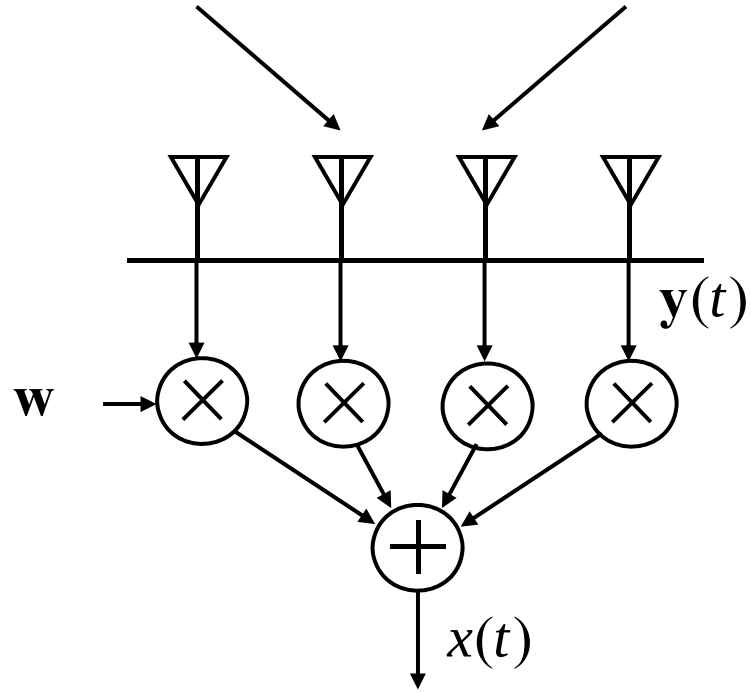

Output SNR

$$\gamma_o = \frac{\mathrm{E}[\left|\mathbf{h}^H \mathbf{h} s(t)\right|^2]}{\mathrm{E}[\left|\mathbf{h}^H \mathbf{n}(t)\right|^2]}$$

$$= \frac{\left|\mathbf{h}^H \mathbf{h}\right|^2 P}{\mathbf{h}^H \mathbf{h} \sigma^2} = \frac{\mathbf{h}^H \mathbf{h} P}{\sigma^2} = \sum_{i=1}^{M} \left|h_i\right|^2 \frac{P}{\sigma^2} = \sum_{i=1}^{M} \gamma_i$$

Sum of each SNR

Diversity Combining

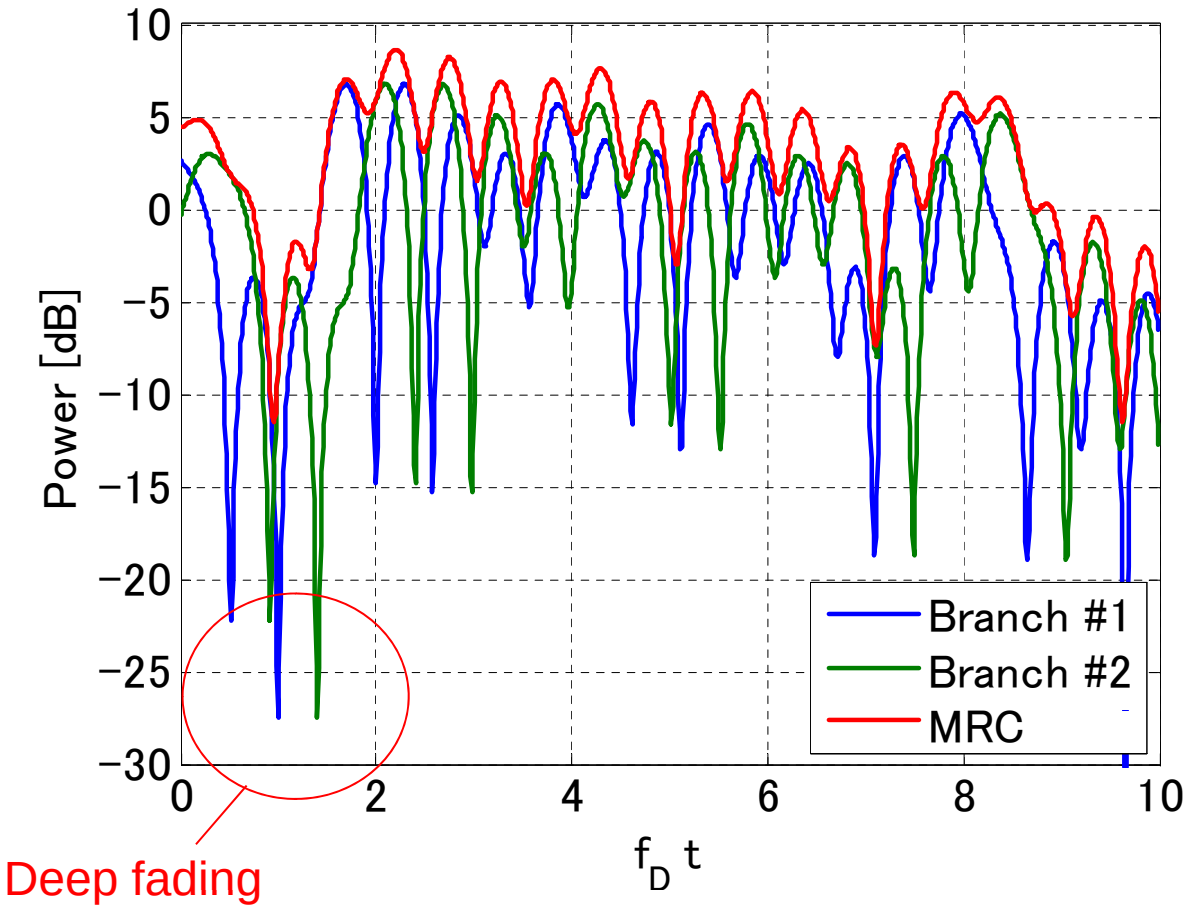

Characteristic Function

PDF of sum of independent random variables

$$f(x) \qquad f(y) \qquad f(x,y) = f(x)f(y)$$

$$z = x + y$$

$$f(z) = \int f(x)f(z-x)\mathrm{d}x$$

Convolution

Characteristic function

$$f(\gamma) = \frac{1}{2\pi}\int_{-\infty}^{\infty}\varphi(t)\exp(-j\gamma t)\mathrm{d}\gamma \quad \longleftrightarrow \quad \varphi(t) = \int_{0}^{\infty} f(\gamma)\exp(j\gamma t)\mathrm{d}\gamma$$

Characteristic function on convolution

$$\gamma = \sum_i \gamma_i \quad \longleftrightarrow \quad \varphi(t) = \prod_i \varphi_i(t)$$

PDF of diversity combining

Output SNR of MRC

$$\gamma = \sum_{i=1}^{M} \gamma_i$$

Characteristic function of each branch

$$f(\gamma_i) = \frac{1}{\bar{\gamma}} \exp\left(-\frac{\gamma_i}{\bar{\gamma}} \right) \qquad \varphi_i(t) = \frac{1}{1 - j\bar{\gamma}t}$$

PDF of output SNR in MRC

$$\varphi(t) = \prod_{i=1}^{M} \varphi_i(t) = \left(\frac{1}{1 - j\bar{\gamma}t} \right)^M$$

$$f(\gamma) = \frac{1}{(M-1)!\bar{\gamma}^M} \gamma^{M-1} \exp\left(-\frac{\gamma}{\bar{\gamma}} \right)$$

Diversity gain

(Xi square distribution)

CDF of Diversity Combining

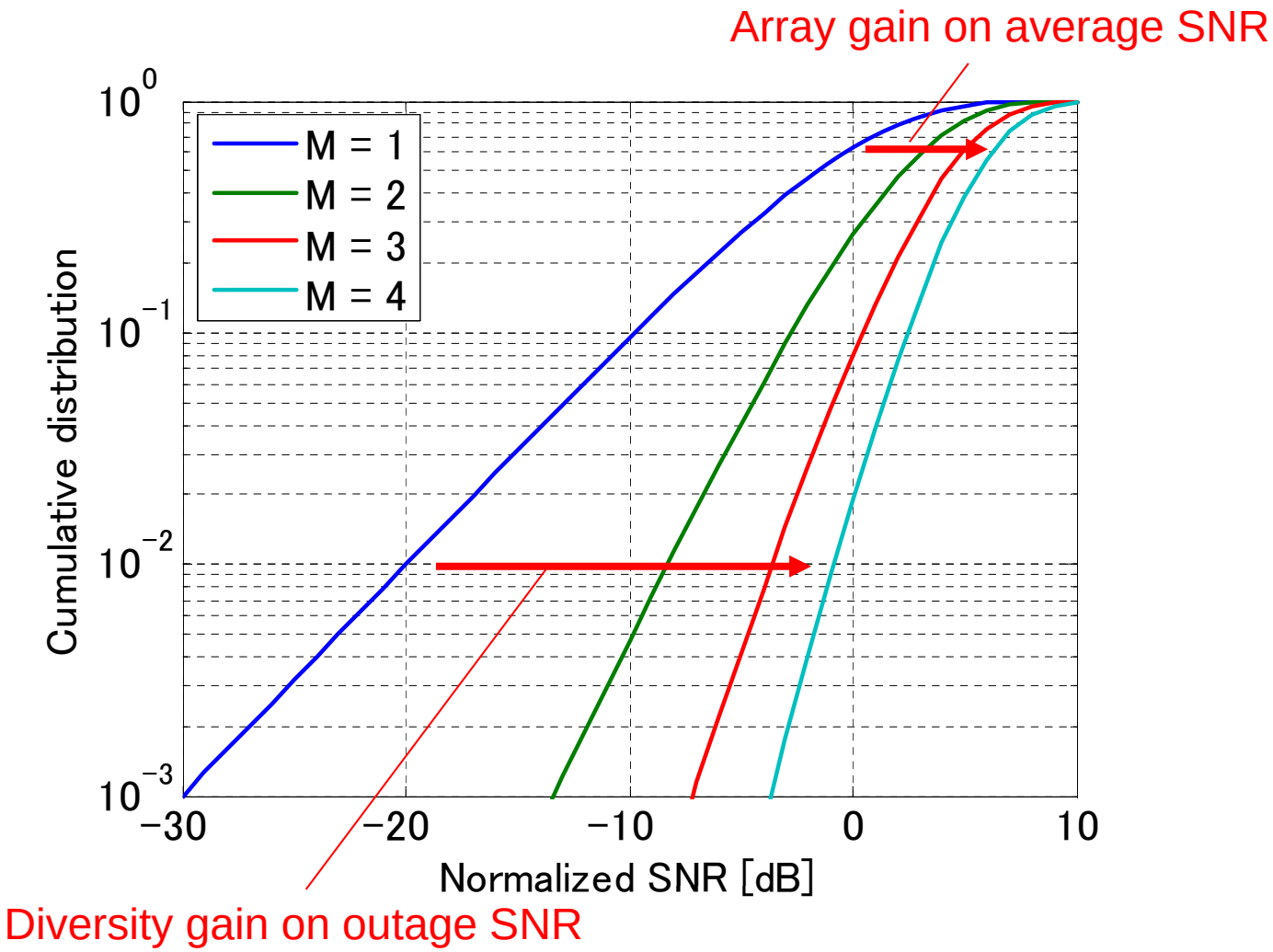

BER of diversity combining

Average BER

$$\overline{P}_{\mathrm{e}}(\overline{\gamma}) = \int P_{\mathrm{e}}(\gamma) f(\gamma) \mathrm{d}\gamma$$

Instantaneous BER for BPSK signaling

$$P_{\mathrm{e}} = \frac{1}{2} \mathrm{erfc}\left(\sqrt{\gamma}\right)$$

PDF of output SNR for MRC

$$f(\gamma) = \frac{1}{(M-1)!\,\overline{\gamma}^{M}} \gamma^{M-1} \exp\left(-\frac{\gamma}{\overline{\gamma}}\right)$$

Average BER for MRC

$$\overline{P}_{\mathrm{e}}(\overline{\gamma}) = \frac{1}{2}\left(1-\sqrt{\frac{\overline{\gamma}}{1+\overline{\gamma}}}\right)^{M} \sum_{i=0}^{M-1} \binom{M-1+i}{i} \left(\frac{1}{2}\left(1-\sqrt{\frac{\overline{\gamma}}{1+\overline{\gamma}}}\right)\right)^{i}$$

Average BER performance

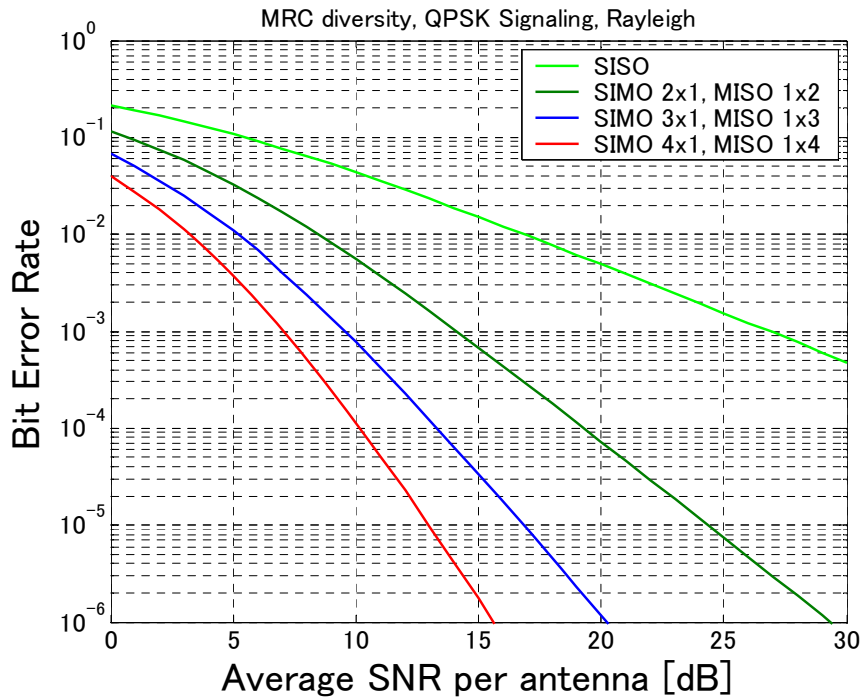

Beam Pattern Interpretation of Diversity

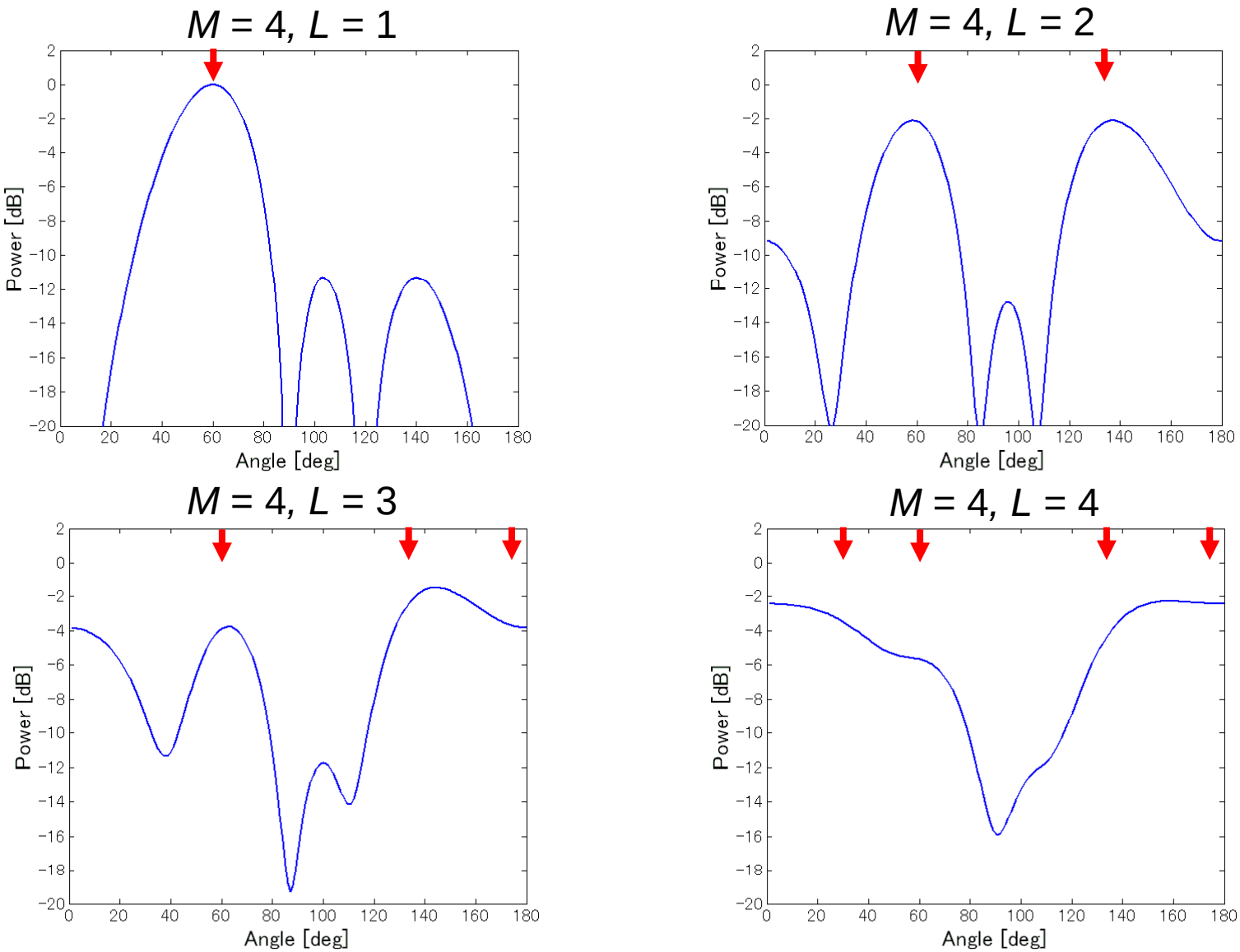

Diversity with Non-Identical Elements

Non-identical elements

$$\bar{\gamma}_i \neq \bar{\gamma}_j \quad \text{due to} \quad d_i(\theta) \neq d_j(\theta)$$

Characteristic function of output SNR with non-identical elements

$$\varphi(t) = \prod_{i=1}^{M} \frac{1}{1 - j\bar{\gamma}_i t}$$

PDF of output SNR in MRC with non-identical elements

$$f(\gamma) = \frac{1}{\prod_{i=1}^{M} \bar{\gamma}_i} \sum_{i=1}^{M} \frac{\exp\left(-\gamma / \bar{\gamma}_i\right)}{\prod_{k=1, k\neq i}^{M} \left(1/\bar{\gamma}_k - 1/\bar{\gamma}_i\right)}$$

CDF of output SNR

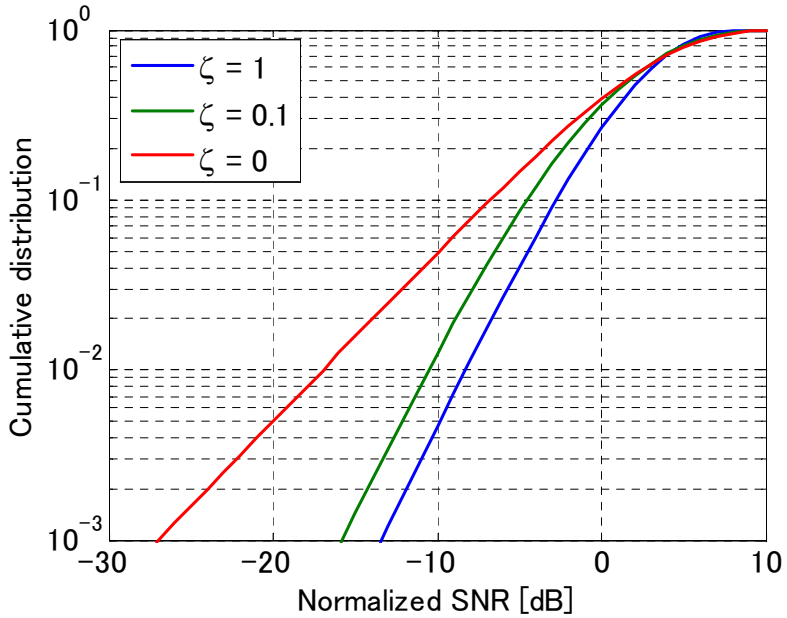

$$M = 2$$

$$\bar{\gamma}_1 + \bar{\gamma}_2 = 2 \qquad \zeta = \bar{\gamma}_2 / \bar{\gamma}_1$$

Spatial Correlation

Correlation matrix of received signals

$$\mathbf{R}_{\mathrm{y}} = \mathrm{E}[\mathbf{y}\mathbf{y}^H] = P\,\mathrm{E}[\mathbf{h}\mathbf{h}^H] + \sigma^2\mathbf{I}$$

Correlation matrix of channels

$$\mathbf{R}_{\mathrm{h}} = \mathrm{E}[\mathbf{h}\mathbf{h}^H] = \mathrm{E}\begin{bmatrix} h_1 h_1^* & h_1 h_2^* \\ h_2 h_1^* & h_2 h_2^* \end{bmatrix}$$

$$\begin{cases} = \begin{bmatrix} \bar{g}_{\mathrm{h}} & 0 \\ 0 & \bar{g}_{\mathrm{h}} \end{bmatrix} & \text{Uncorrelated} \\ = \begin{bmatrix} \bar{g}_{\mathrm{h}} & \bar{g}_{\mathrm{h}}\rho \\ \bar{g}_{\mathrm{h}}\rho^* & \bar{g}_{\mathrm{h}} \end{bmatrix} & \text{Correlated} \end{cases}$$

$|\rho|$: Correlation coefficient between branches

$|\rho| = 0$

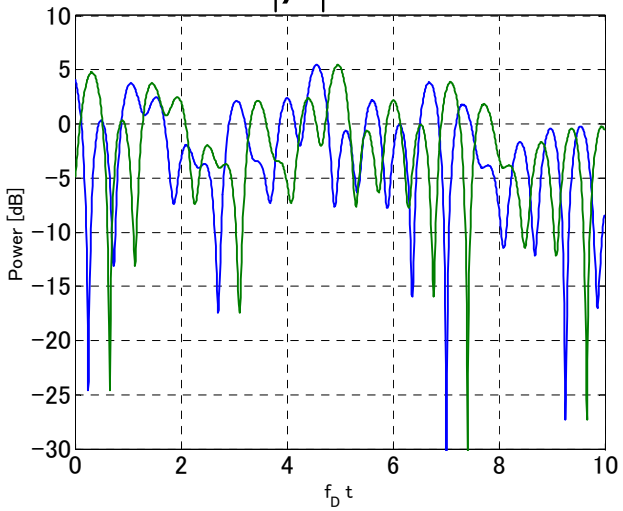

$|\rho| = 0.9$

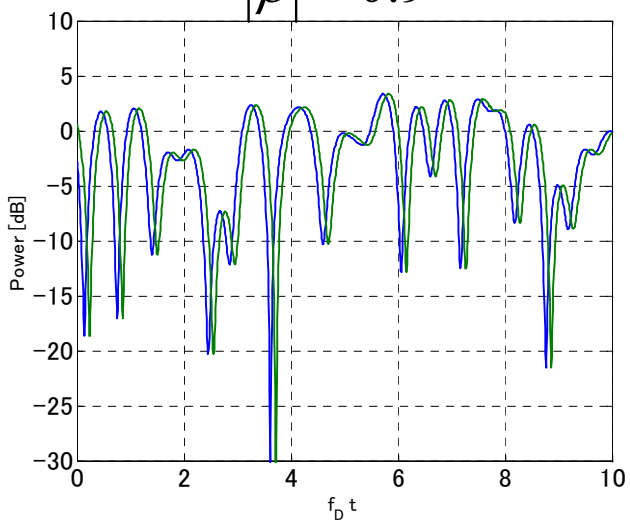

Diversity Combining with Correlation

Eigen decomposition of correlation matrix

$$\mathbf{R}_{\mathrm{h}} = \begin{bmatrix} \bar{g}_h & \bar{g}_h \rho \\ \bar{g}_h \rho^* & \bar{g}_h \end{bmatrix} = \mathbf{E}\Lambda\mathbf{E}^H$$

$$\lambda_1 = (1+|\rho|)\bar{g}_{\mathrm{h}} \qquad \lambda_2 = (1-|\rho|)\bar{g}_{\mathrm{h}}$$

Orthogonal conversion

$$\mathbf{E}^H \mathbf{R}_{\mathrm{y}} \mathbf{E} = P \begin{bmatrix} (1+|\rho|)\bar{g}_{\mathrm{h}} & 0 \\ 0 & (1-|\rho|)\bar{g}_{\mathrm{h}} \end{bmatrix} + \sigma^2 \mathbf{I}$$

CDF of output SNR

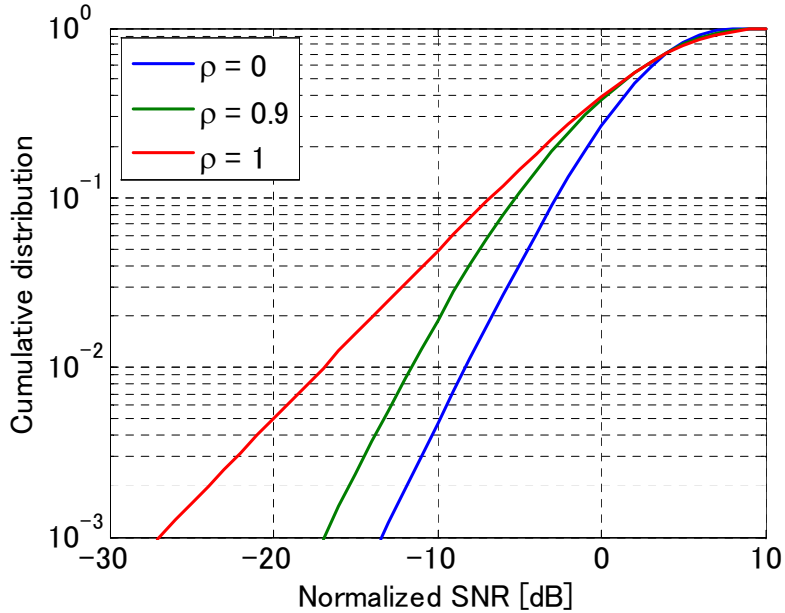

Diversity with non-identical elements

$$f(\gamma) = \frac{1}{2|\rho|\bar{\gamma}} \left[\exp\left(-\frac{\gamma}{(1+|\rho|)\bar{\gamma}} \right) - \exp\left(-\frac{\gamma}{(1-|\rho|)\bar{\gamma}} \right) \right]$$

Angular Profile & Spatial Correlation

Correlation matrix

$$\mathbf{R}_{\mathrm{h}} = \mathrm{E}\left[\mathbf{h}\mathbf{h}^{H}\right] = \begin{bmatrix} \bar{g}_{\mathrm{h}} & \bar{g}_{\mathrm{h}}\rho \\ \bar{g}_{\mathrm{h}}\rho^{*} & \bar{g}_{\mathrm{h}} \end{bmatrix} \qquad \mathbf{h} = \sum_{l=1}^{L} \beta_l e^{jkvt\cos\theta_l}\mathbf{a}(\theta_l)$$

Uncorrelated scattering

$$\mathrm{E}\left[e^{jkvt\cos\theta_i} e^{-jkvt\cos\theta_j}\right] = 0 \qquad \text{for} \qquad i \neq j$$

Spatial correlation

$$\mathbf{R}_{12} = \mathrm{E}\left[\left(\sum_{l=1}^{L} \beta_l e^{jkvt\cos\theta_l}\right)\left(\sum_{l=1}^{L} \beta_l e^{jkvt\cos\theta_l} e^{jkd\cos\theta_l}\right)^{*}\right]$$

$$= \sum_{l=1}^{L} \left|\beta_l\right|^2 e^{-jkd\cos\theta_l} = \int_0^{2\pi} \left|\beta(\theta)\right|^2 e^{-jkd\cos\theta}\,\mathrm{d}\theta$$

$$\rho = \frac{\mathbf{R}_{12}}{\bar{g}_{\mathrm{h}}} = \int_0^{2\pi} P(\theta) e^{-jkd\cos\theta_l}\,\mathrm{d}\theta$$

Angular profile

$$P(\theta) = \frac{\left|\beta(\theta)\right|^2}{\int_0^{2\pi} \left|\beta(\theta)\right|^2 \mathrm{d}\theta}$$

Angular Profile & Spatial Correlation

Uniform distribution

$$P(\theta) = \frac{1}{2\pi} \quad \longleftrightarrow \quad \rho(d) = \mathrm{J}_0(kd)$$

0th order Bessel function

Gaussian distribution

$$P(\theta) = \frac{1}{\sqrt{2\pi}\sigma_\theta} \exp\left(-\frac{(\theta-\theta_0)^2}{2\sigma_\theta^2}\right)$$

$$\longleftrightarrow \quad \rho(d) \cong \exp\left(-\frac{(\sigma_\theta kd \sin\theta_0)^2}{2}\right)$$

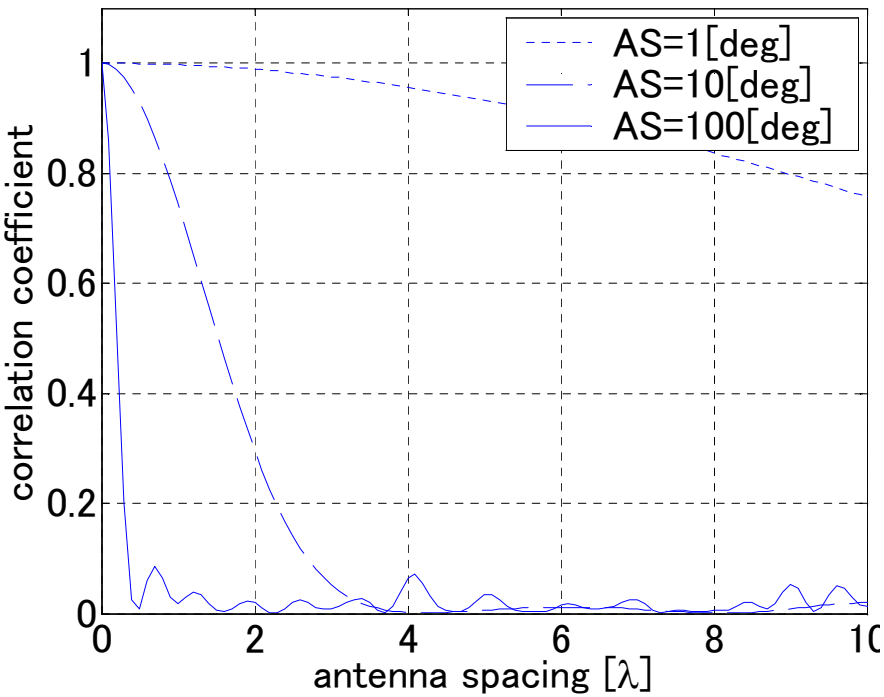

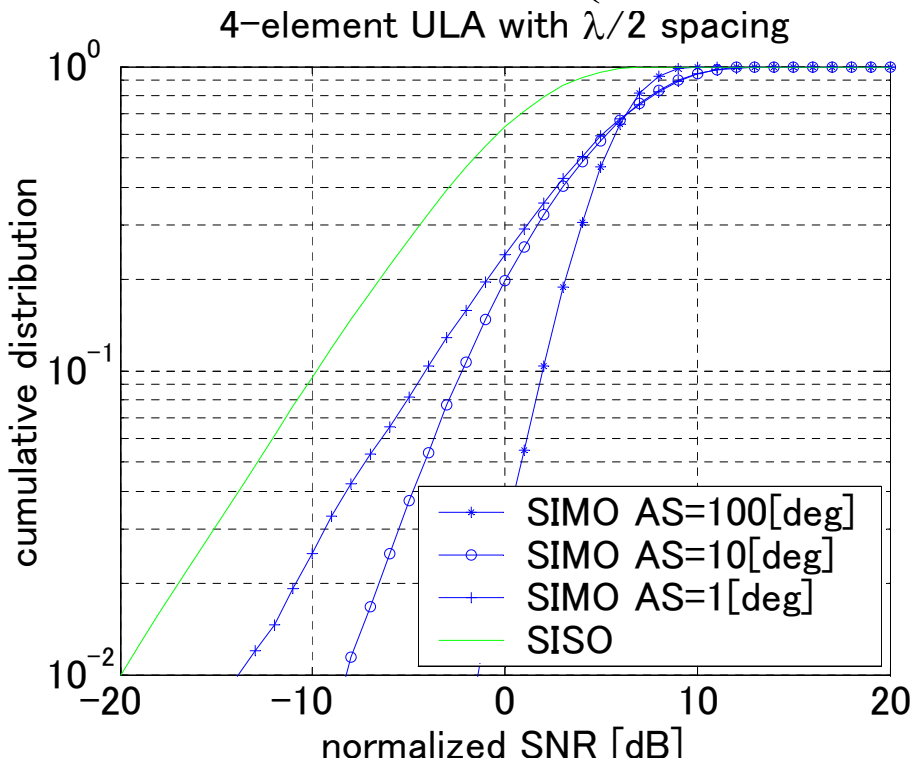

Diversity with Interference Cancellation

Received signal with interference

$$\mathbf{y}(t) = \mathbf{h}_{\mathrm{D}} s_{\mathrm{D}}(t) + \sum_{i=1}^{N} \mathbf{h}_{\mathrm{I}i} s_{\mathrm{I}i}(t) + \mathbf{n}(t)$$

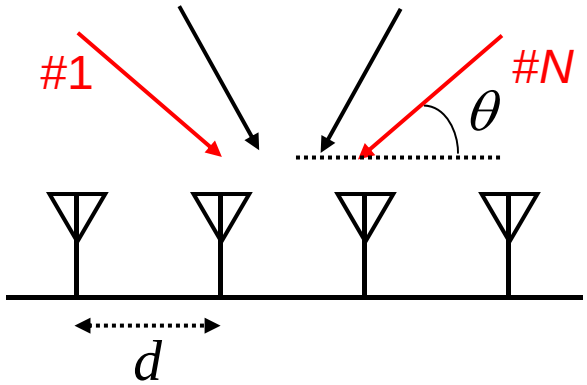

Interference cancellation

$$\mathbf{Q} = \left[\mathbf{e}_{N+1}, \cdots, \mathbf{e}_{M}\right] \in C^{M \times (M-N)}$$

$$\mathbf{Q}^{H}\mathbf{y} = \mathbf{Q}^{H}\mathbf{h}_{\mathrm{D}} s(t) + \mathbf{Q}^{H}\mathbf{n}(t)$$

$$= \tilde{\mathbf{h}}_{\mathrm{D}} s(t) + \tilde{\mathbf{n}}(t) \in C^{M-N}$$

Subspace decomposition

$$\mathbf{H}_{\mathrm{I}} = \left[\mathbf{h}_{\mathrm{I}1}, \mathbf{h}_{\mathrm{I}2}, \cdots, \mathbf{h}_{\mathrm{I}N}\right]$$

$$\mathbf{H}_{\mathrm{I}}\mathbf{H}_{\mathrm{I}}^{H} = \mathbf{E}\Lambda\mathbf{E}^{H}$$

$$\mathbf{E} = \left[\mathbf{e}_{1}, \cdots, \mathbf{e}_{N}, \underbrace{\mathbf{e}_{N+1}, \cdots, \mathbf{e}_{M}}_{\text{Null space}}\right]$$

Diversity combining

$$\mathbf{x} = \mathbf{w}^{H}\mathbf{Q}^{H}\mathbf{y}$$

$$\mathbf{w} = \tilde{\mathbf{h}}_{\mathrm{D}}$$

Interference cancellation (N_{th} order)

Diversity combining (M-N_{th} order)

Summary

- Array signal processing
  - Beamforming & interference cancellation for plane wave signal
  - Diversity combining for multi-path signal
  - Diversity combining with interference cancellation

⇩

Improvement on SNR, SIR, and outage SNR

- Further revolution

What happen if array antennas are employed both at Tx and Rx

MIMO communication system