1

Fatigue Strength of Welded Joints

Department of Civil Engineering
Tokyo Institute of Technology

2

Contents

- Effects of Residual Welding Stresses on Fatigue Crack Growth Rate
- Effects of Weld Defects on Fatigue Strengths
  - Longitudinal Welded Joints Containing Blowholes
  - Butt-Welded Joints Containing Various Embedded Defects
- High Strength Steels
  Fatigue Strength of Large-Size Gusset Joints of 800MPa Class Steels
- Size Effects
  Full Size Fatigue Tests of Truss Chords

3

Topic 1

Effects of Residual Welding Stresses on Fatigue Crack Growth Rate

4

Fatigue Crack Propagation Rate, da/dN

Fatigue Life { Crack Initiation Life, N_C / Crack Propagation Life, N_P

Evaluation of Np

ΔK—da/dN Relationship

Stress intensity factor range

Affected by Residual Welding Stresses?

Experimental Investigations

5

Specimens

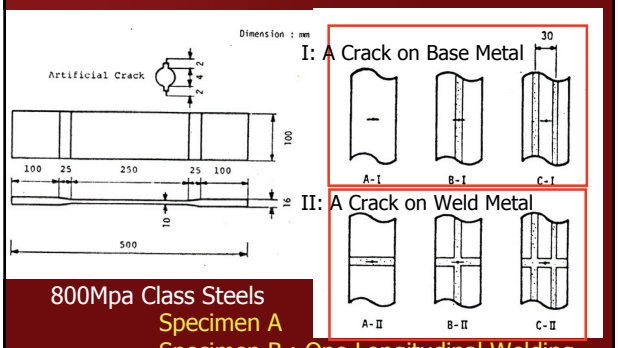

800Mpa Class Steels
Specimen A
Specimen B : One Longitudinal Welding
Specimen C : Two Longitudinal Welding

6

Measurements of Residual Stress

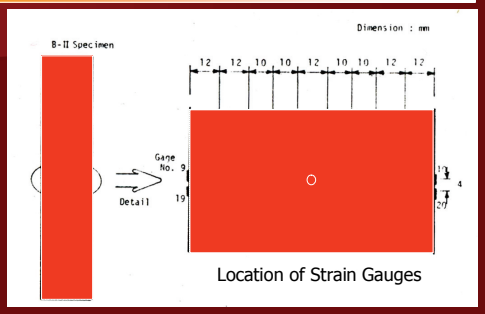

No.1～No.10: for measuring the change of residual stress.

No.11～No.22: for measuring initial residual stress.

Change of Residual Stress Due to Crack Propagation

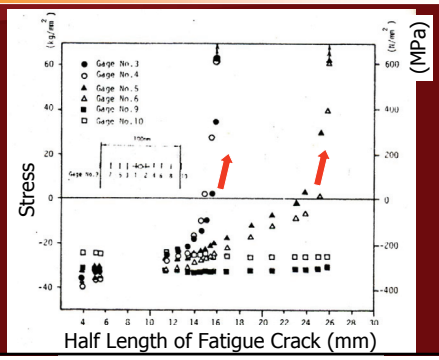

Residual welding stress distribution with 4 types of slits (No cracks)

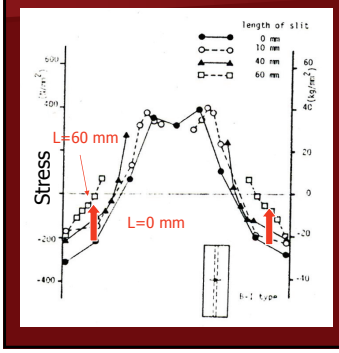

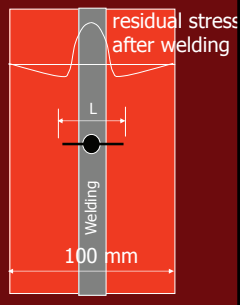

B-I Type Specimen

Residual welding stress distribution with 4 types of slits (No cracks)

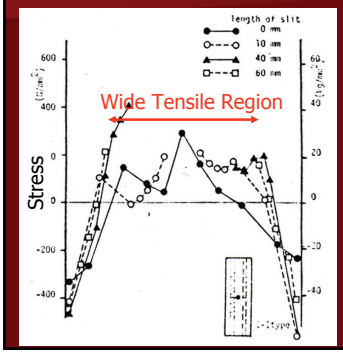

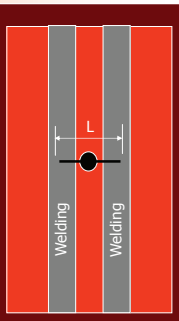

C-I Type Specimen

ΔK—da/dN Relationship (1)

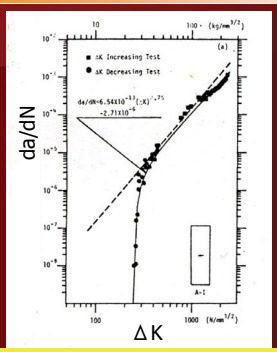

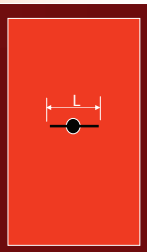

A-I Type Specimen
No Weld-Beads

Equation 1

$$da/dN\,[mm/cycle] = 6.54\times10^{-13}\left(\Delta K[N/mm^{1.5}]\right)^{2.75} - 2.71\times10^{-6}$$

ΔK—da/dN Relationship (2)

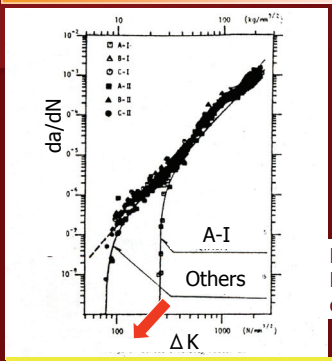

No Significant Differences Between The Other Types of Specimens

Equation 2

$$da/dN\,[mm/cycle] = 3.82\times10^{-13}\left(\Delta K[N/mm^{1.5}]\right)^{2.95} - 9.37\times10^{-8}$$

Estimation of Fatigue Crack Propagation Life, Np

$$da/dN\,[mm/cycle] = 6.54\times10^{-13}\left(\Delta K[N/mm^{1.5}]\right)^{2.75} - 2.71\times10^{-6}$$

Equation 1

$$da/dN\,[mm/cycle] = 3.82\times10^{-13}\left(\Delta K[N/mm^{1.5}]\right)^{2.95} - 9.37\times10^{-8}$$

Equation 2

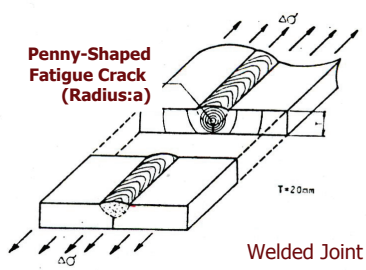

Welded Joint Model

13

Estimation of Fatigue Crack Propagation Life, Np

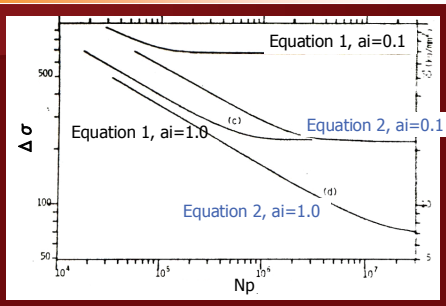

Δσ-Np curves calculated from Eq.(2) and Eq.(3) greatly differ especially in the range of long life

14

Topic 2-1

Effects of Weld Defects on Fatigue Strengths
Longitudinal Welded Joints
Containing Blowholes

15

Specimens

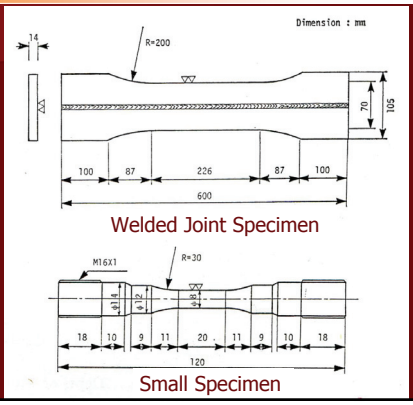

16

Residual Stress Distribution in The Welded Joint Specimen

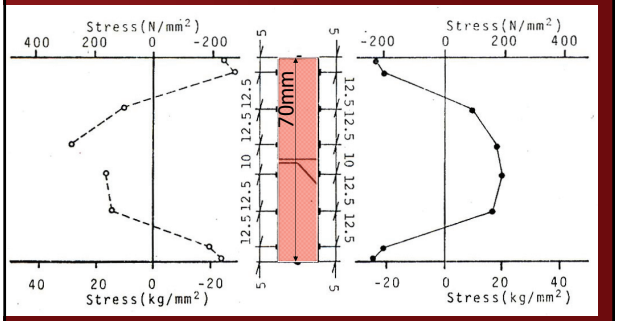

17

Classification of Blowhole Sizes

Tested in Radiographic Examination

- No Blowholes
- Small Blowholes b < 1mm
- Medium Blowholes 1 mm < b < 2mm
- Large Blowholes b > 2mm

b: Blowhole Length

18

Fatigue Test Results

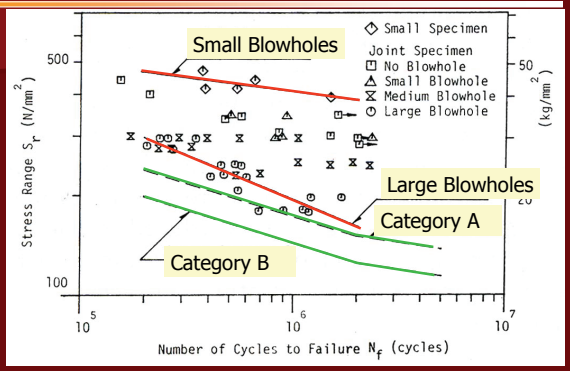

Fatigue Cracks Originated From Blowholes

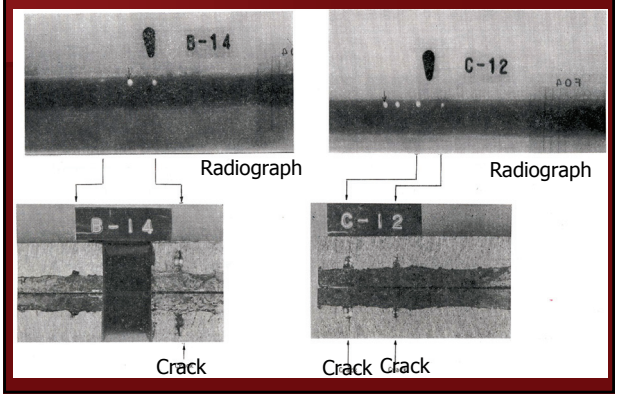

Fracture Surfaces with Beach Marks

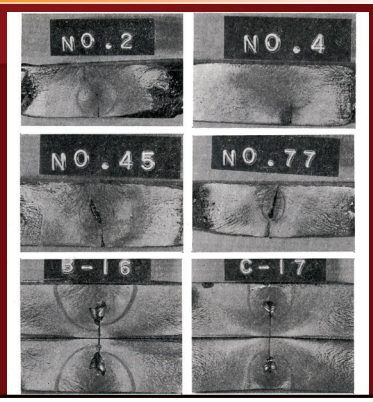

Fatigue Crack Propagation from Blowholes

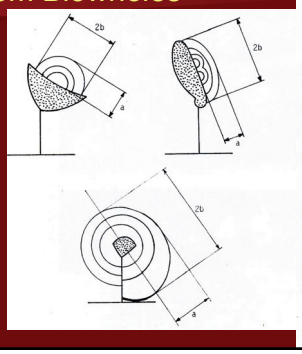

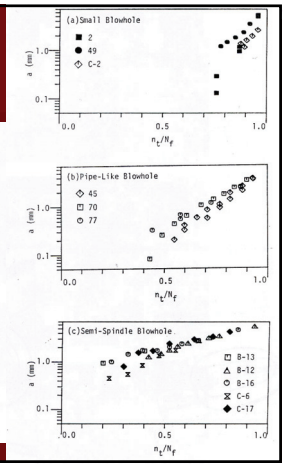

Fatigue Crack Propagation Rate from Blowholes

$$\frac{da}{dN} = 2.97\times10^{-13}(\Delta K)^{3.0}$$

$$\frac{da}{dN} = 0.90\times10^{-13}(\Delta K)^{3.0}$$

$$\frac{da}{dN} = 1.73\times10^{-13}(\Delta K)^{3.0} - 8.34\times10^{-8}$$

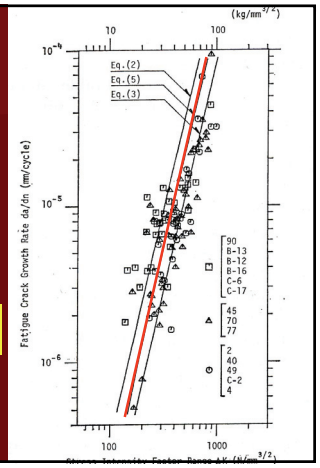

Topic 2-1

Effects of Weld Defects on Fatigue Strengths
Butt-Welded Joints
Containing Various Embedded Defects

Various Embedded Weld Defects

- Butt welded joint with V-groove

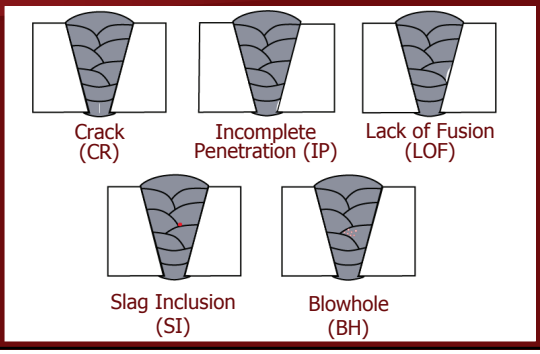

Specimen Preparation

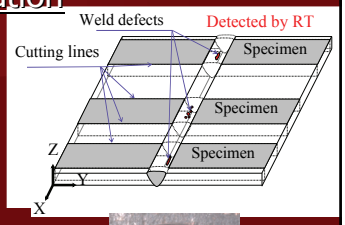

JIS SM490A

	YP(MPa)	TS(MPa)
SM490	343	532
DW-Z100	497	567

JIS SM570Q

	YP(MPa)	TS(MPa)
SM570-Q	588	660
DW-60	534	614

JIS SM490A: 150 specimens
JIS SM570Q: 27 specimens

Specimen Configuration

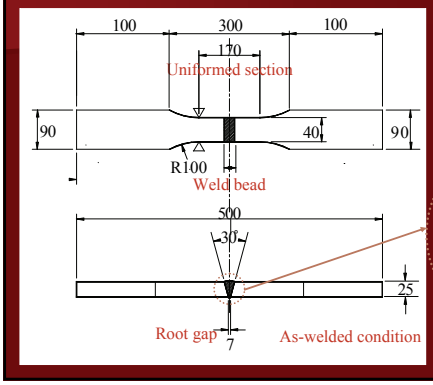

Weld detail, V-groove

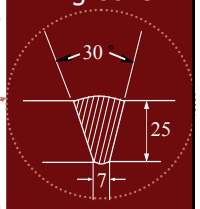

Fatigue Test

- Testing machine
  - Capacity: 300 kN
- Testing conditions
  - Constant amplitude
  - Stress ratio R=0
  - Maximum stress: 100 - 350 MPa

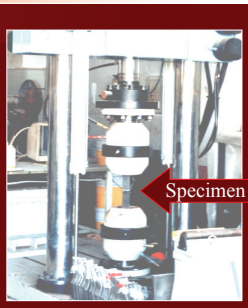

Fatigue Test Results

Evaluation : defect length "2c" is used.

Single defect | Multi defects

RT (Xray)

RS (Real size measured on failure surface)

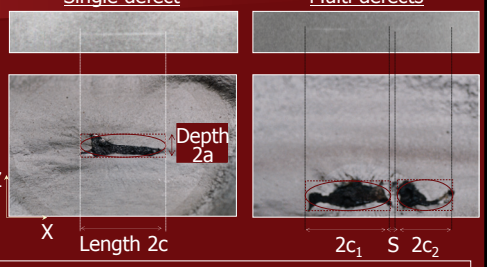

WES 2805

Real Size

$S_0 = 0.25 \times \min(c_1, c_2)$

$S \le S_0 \rightarrow 2c = 2c_1 + 2c_2 + S$

$S > S_0 \rightarrow$ cracks are isolated

Fatigue Test Results, CR Type Defect (SM490A)

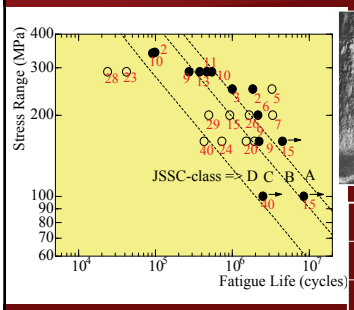

	initiation	length
○	Defect	RS
●	Toe	RT

Fatigue Test Result, IP Type Defect (SM490A)

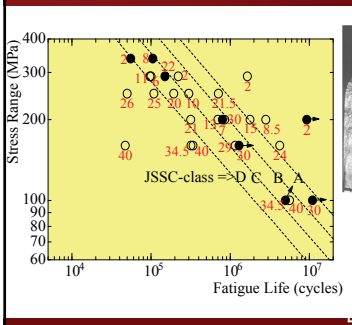

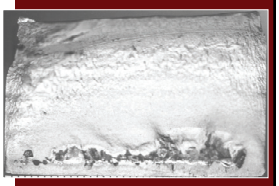

	initiation	length
○	Defect	RS
●	Toe	RT

31

Fatigue Test Result, LOF Type Defect (SM490A)

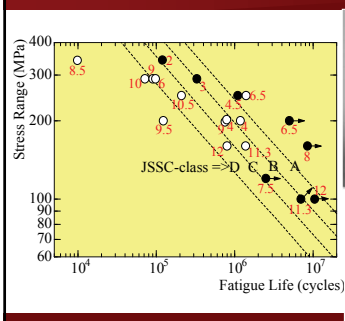

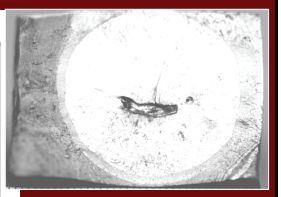

	initiation	length
○	Defect	RS
●	Toe	RT

32

Fatigue Test Result, SI Type Defect (SM490A)

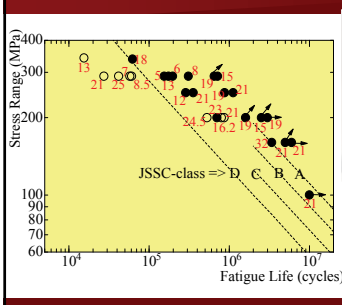

	initiation	length
○	Defect	RS
●	Toe	RT

33

Fatigue Test Result, BH Type Defect(SM490A)

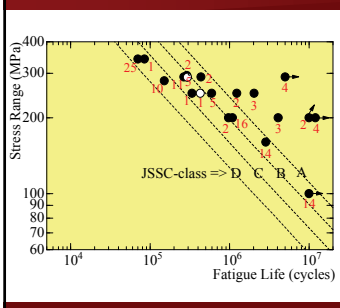

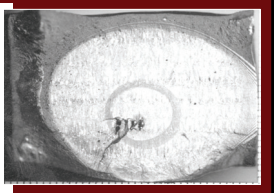

	initiation	length
○	Defect	RS
●	Toe	RT

34

Topic 3

High Strength Steels

Fatigue Strength of Large-Size Gusset Joints of 800MPa Class Steels

35

Types of Gusset Joints

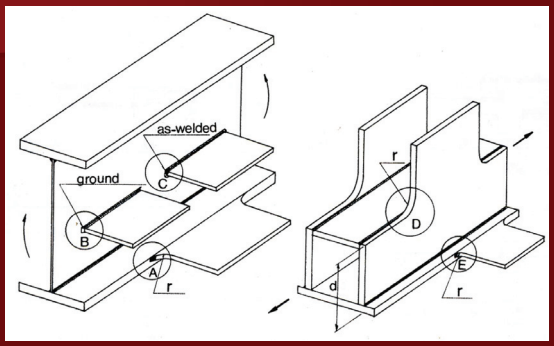

36

Specimens

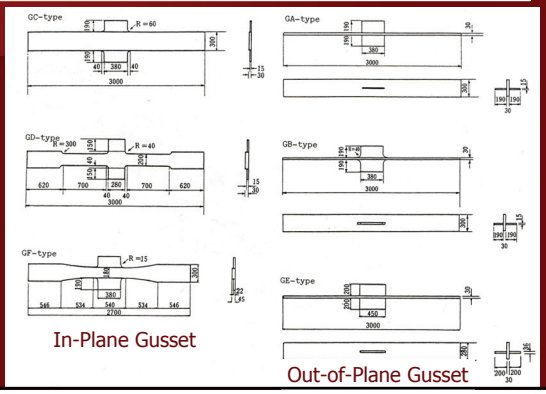

Welding Details of Specimens

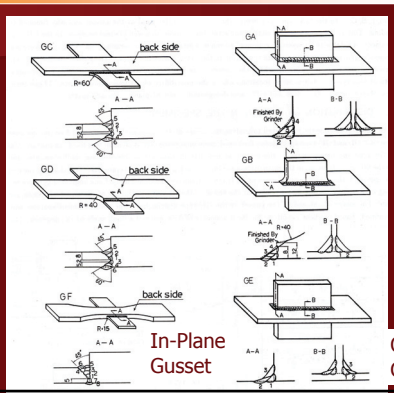

The Used Steels

HT80, SM570Q

Steel	Mechanical Properties					Chemical compositions %											Remarks
	t	Y.P.	T.S.	E ℓ	VE	C	Si	Mn	P	S	Cu	Ni	Cr	Mo	B	V	Ceq	
	mm	MPa	MPa	%	N.m		×100			×1000			×100		×1000		×100	
HT80	30	833	882	22	80	11	25	97	18	8	250	83	51	38	10	44	50	Main Pl. GA~GE
HT80	22	764	823	24	201	10	27	97	15	5	—	104	59	33	2	—	50	Main Pl. GF
SM58Q	15	568	657	36	186	14	34	133	17	6	—	1	2	3	—	37	39	Gusset Pl. GA~GD

Stress Distribution at the End of the In-Plane Gussets

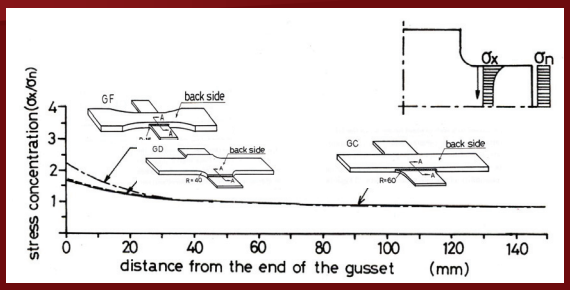

Stress Distribution at the End of the Out-of-Plane Gussets

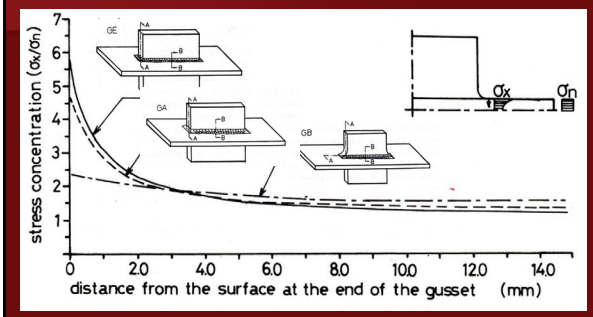

Fatigue Test Results

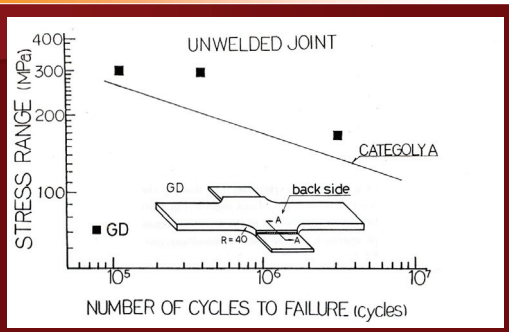

Fatigue Test Results (In-Plane)

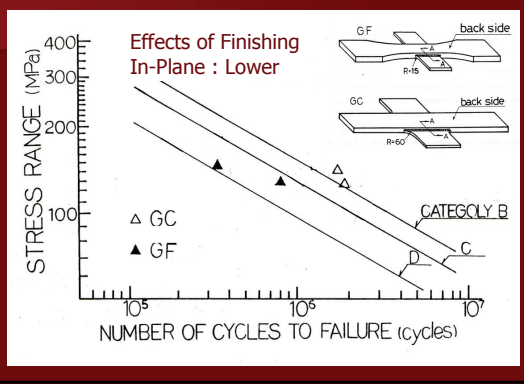

43

Fatigue Crack in In-Plane Gusset Joints

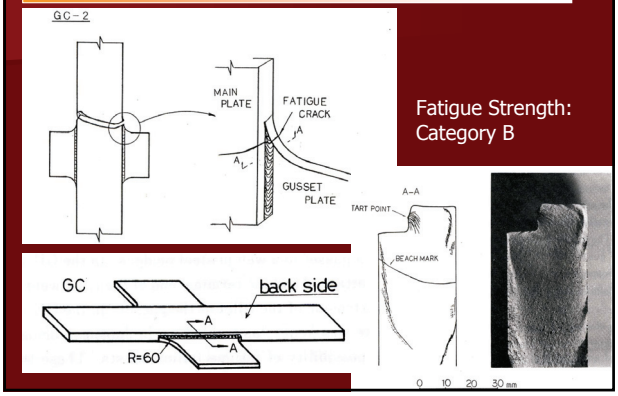

Fatigue Strength: Category B

44

Fatigue Crack in In-Plane Gusset Joints

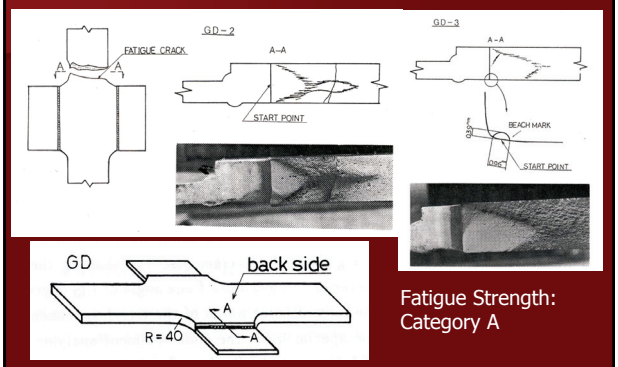

Fatigue Strength: Category A

45

Fatigue Crack in In-Plane Gusset Joints

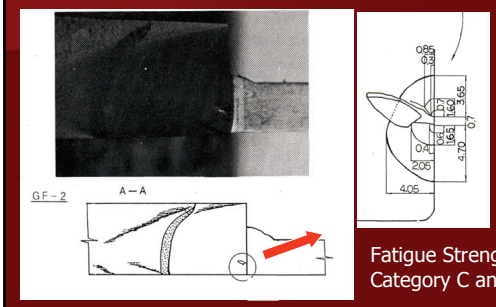

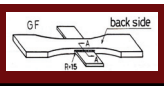

Fatigue Strength: Category C and D

46

Fatigue Test Results (Out-of-Plane)

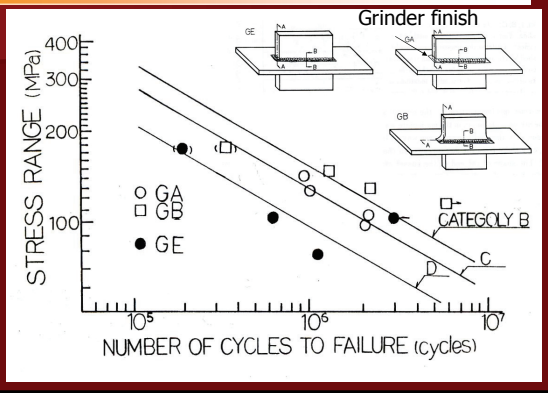

47

Fatigue Crack in Out-of-Plane Gusset Joints

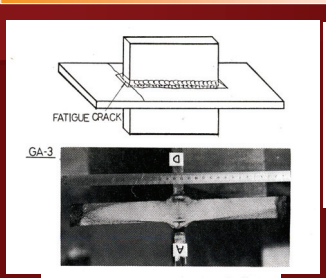

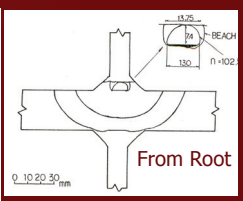

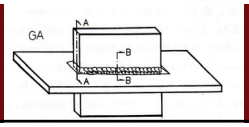

Fatigue Strength: Category D

48

Fatigue Crack in Out-of-Plane Gusset Joints

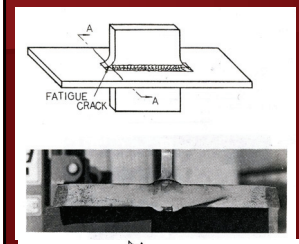

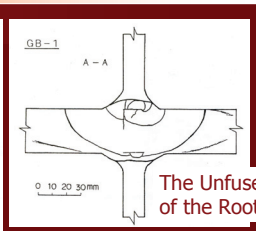

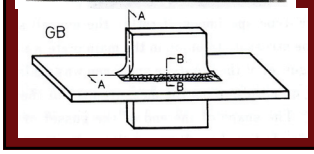

Fatigue Strength: Category C