Today's Plan

Linear viscoelasticity IV

I. Recap of previous lectures

II. Standard linear solid : solution

I- Recap of previous lectures

Relations between viscoelastic funcntions:

① Hereditary constitutive relationships

$$\varepsilon(t)=J_u\sigma+\int_{-\infty}^{t} J(t-\tau)\frac{d\sigma(\tau)}{d\tau}d\tau \qquad \sigma(t)=E_r\varepsilon+\int_{-\infty}^{t} E(t-\tau)\frac{d\varepsilon(\tau)}{d\tau}d\tau$$

with $\int_0^t G(\tau)J(t-\tau)d\tau = t.$

② Laplace Carson transforms

$$\sigma^*(p)=E^*(p)\varepsilon^*(p) \qquad \varepsilon^*(p)=J^*(p)\sigma^*(p)$$

with $E^*(p)=1/J^*(p)$

③ Complex modulus and complex compliance

$$\tilde{E}(\omega)=E^*(p=i\omega)=E'(i\omega)+iE''(i\omega)$$

$$\tilde{J}(\omega)=J^*(p=i\omega)=J'(i\omega)-iJ''(i\omega)$$

$$E(t)=\frac{2}{\pi}\int_0^\infty \frac{E'(\eta)-Er}{\omega}\sin(\omega t)d\omega$$

$$E(t)=\frac{2}{\pi}\int_0^\infty \frac{E''(\eta)}{\omega}\cos(\omega t)d\omega$$

Properties

Correspondance between limiting values

① $t = 0$ $E(0)J(0)=1$ noted $E_uJ_u=1$

Dynamic experiments $E(0)E'(\omega\rightarrow \infty)=1$

② $t = \infty$ $E(\infty)J(\infty)=1$ noted $E_rJ_r=1$

Dynamic experiments $E(\infty)E'(\omega\rightarrow 0)=1$

Recap : usual tests

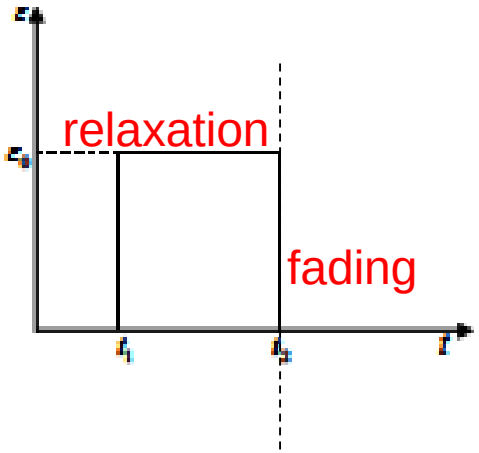

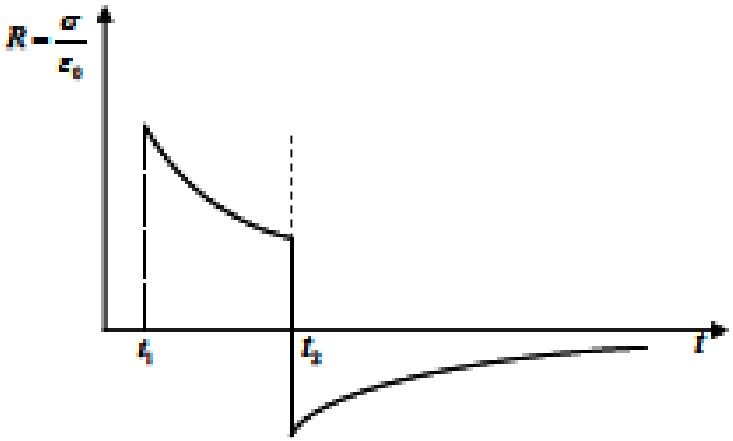

$$\sigma(t) = \varepsilon_0 \left[E(t - t_1) \right]$$

$$\sigma(t) = \varepsilon_0 \left[E(t - t_1) - E(t - t_2) \right]$$

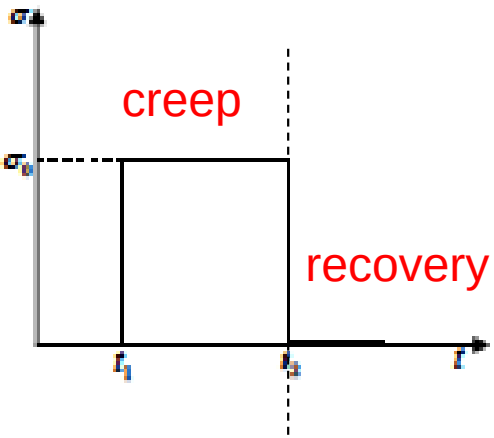

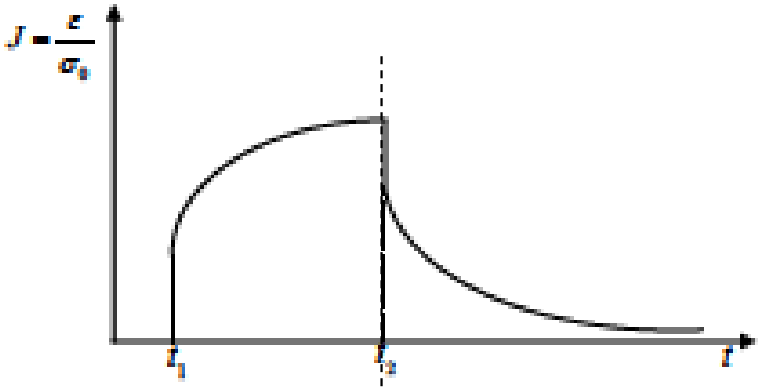

$$\varepsilon(t) = \sigma_0 \left[J(t - t_1) \right]$$

$$\varepsilon(t) = \sigma_0 \left[J(t - t_1) - J(t - t_2) \right]$$

II- Standard linear solid (Zener model)

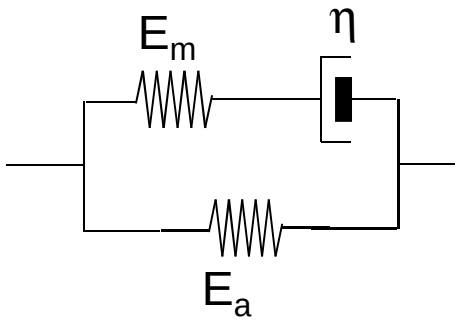

$$\sigma+\tau\frac{d\sigma}{dt}=E_a\varepsilon+(E_m+E_a)\tau\frac{d\varepsilon}{dt}$$ where $\tau=\eta/E_m$

1) Give the responses obtained during
   - Creep and recovery test
   - relaxation and fading test
   - dynamic test
2) Show that this model is equivalent to :

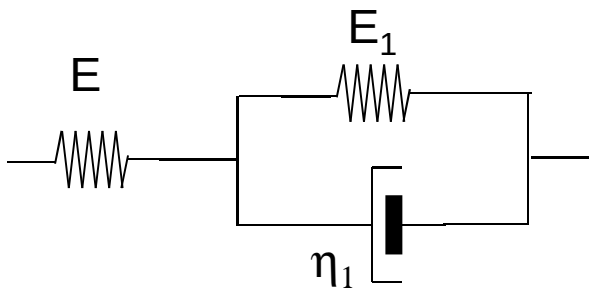

"Voigt" form of the SLS

3) Give the response during loading at constant strain rate.

Thank you for your attention

Lecture# 10 will be given on June 26th